Pulpwood grapple

060 with rotator RT-222

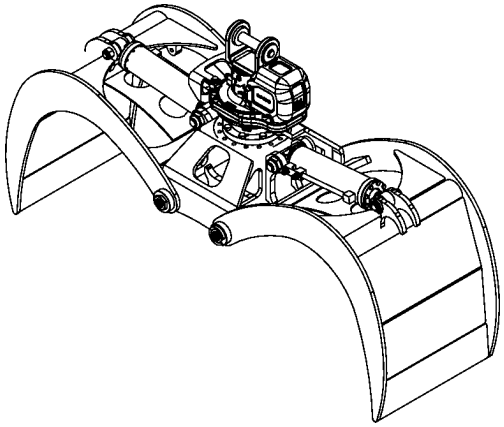

Opening	75 in. (1905 mm)
Closing	37 3/8 in. (949 mm)
Volume	.402 cord of 8 ft. wood
Area tip to tip	6.4 sq. ft. (.6 sq. meter)
Rotator lifting capacity	22000 lb (9980 kg)
Torque at relief pressure	10700 in.lb (1209 Nm) @ 913 psi (63 bars)
Steel* thickness	5/8" (16 mm)
Weight	1050 lb (476 kg)

*High tensile strength steel: 165,000 psi (1138 MPa)

Rotator	**Maximum pressure:** 5000 psi (345 bars)	**Recommended flow:** 10 gpm (38 l/min.)
Rotator recommended flow will produce a speed of 30 rpm.		

Cylinder	Diameter	Recommended pressure	Pressure range	Flow range	Lock valves
Standard	3 1/2" (89 mm)	2350 psi (162 bars)	2000 - 2700 psi (138 - 186 bars)	15 - 22 gpm (57 - 83 l/min.)	no
Standard	3" (76 mm)	3250 psi (224 bars)	2800 - 3700 psi (193 - 255 bars)	10 - 15 gpm (38 - 57 l/min.)	no

Grapple cylinder maximum flow will theoretically produce a complete grapple open/close cycle in 4 seconds.

Reference	Dimension
A	34 5/8 in. (879 mm)
B	37 3/8 in. (949 mm)
C	75 in. (1905 mm)
D	79 3/4 in. (2026 mm)
E	44 1/4 in. (1124 mm)
F	18 1/8 in. (460 mm)
G	24 3/8 in. (619 mm)
H	28 5/8 in. (727 mm)

Front view

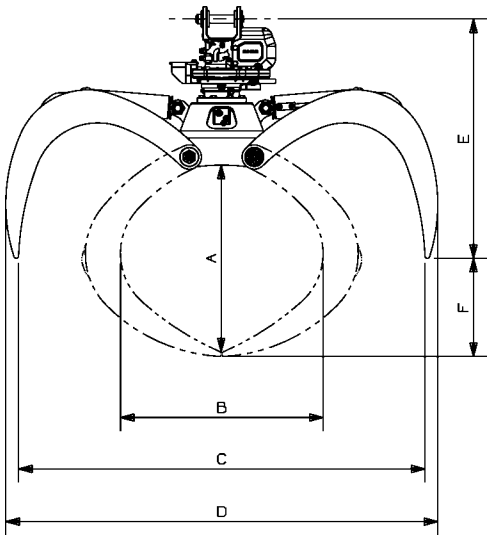

Side view

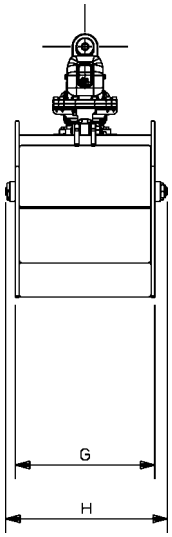

OPTIONS: Leveling plate 140 lb. Chain 115 lb.

web site: www.rotobec.com **e-mail: rotobec@rotobec.com**

Rotobec Inc.: Head office serving OEM's and Eastern Canada	Ph: (418) 383-3002	Fax: (418) 383-5334
Rotobec West: Branch serving Western Canada and Western USA	Ph: (250) 765-1161	Fax: (250) 765-0035
Rotobec USA: Branch serving Eastern and Central USA	Ph: (603) 444-2103	Fax: (603) 444-0327

We reserve the right to change specifications and to improve our products without notice or obligation.

V.06/2009

Pulpwood grapple

060 with rotator R-9150

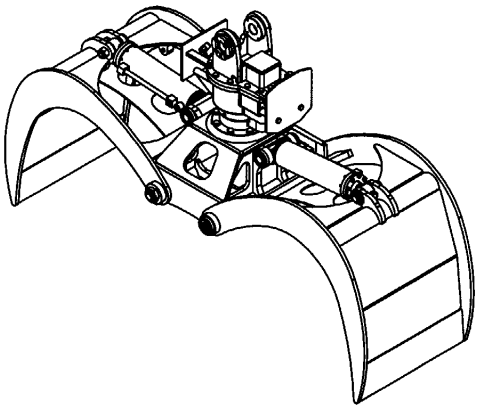

Opening	75 in. (1905 mm)
Closing	37 3/8 in. (949 mm)
Volume	.402 cord of 8 ft. wood
Area tip to tip	6.4 sq. ft. (.6 sq. meter)
Rotator lifting capacity	18000 lb (8165 kg)
Torque at relief pressure	8450 in.lb (955 Nm) @ 913 psi (63 bars)
Steel* thickness	5/8" (16 mm)
Weight	1060 lb (481 kg)

*High tensile strength steel: 165,000 psi (1138 MPa)

Rotator	**Maximum pressure:** 4000 psi (276 bars)	**Recommended flow:** 8 gpm (30 l/min.)
Rotator recommended flow will produce a speed of 30 rpm.		

Cylinder	Diameter	Recommended pressure	Pressure range	Flow range	Lock valves
Standard	3 1/2" (89 mm)	2350 psi (162 bars)	2000 - 2700 psi (138 - 186 bars)	15 - 22 gpm (57 - 83 l/min.)	no
Standard	3" (76 mm)	3250 psi (224 bars)	2800 - 3700 psi (193 - 255 bars)	10 - 15 gpm (38 - 57 l/min.)	no

Grapple cylinder maximum flow will theoretically produce a complete grapple open/close cycle in 4 seconds.

Reference	Dimension
A	34 5/8 in. (879 mm)
B	37 3/8 in. (949 mm)
C	75 in. (1905 mm)
D	79 3/4 in. (2026 mm)
E	45 7/8 in. (1165 mm)
F	18 1/8 in. (460 mm)
G	24 3/8 in. (619 mm)
H	28 5/8 in. (727 mm)

Front view

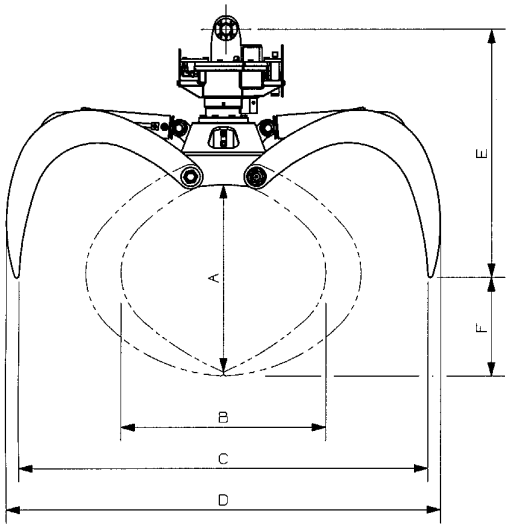

Side view

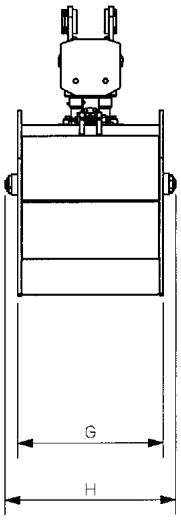

OPTIONS: Leveling plate 140 lb. Chain 115 lb.

web site: www.rotobec.com **e-mail: rotobec@rotobec.com**

Rotobec Inc.: Head office serving OEM's and Eastern Canada	Ph: (418) 383-3002	Fax: (418) 383-5334
Rotobec West: Branch serving Western Canada and Western USA	Ph: (250) 765-1161	Fax: (250) 765-0035
Rotobec USA: Branch serving Eastern and Central USA	Ph: (603) 444-2103	Fax: (603) 444-0327

We reserve the right to change specifications and to improve our products without notice or obligation.