ROTOBEC
TOUGH HANDLING EQUIPMENT

Power Attachement
RPA2030D32 RT-322-MT

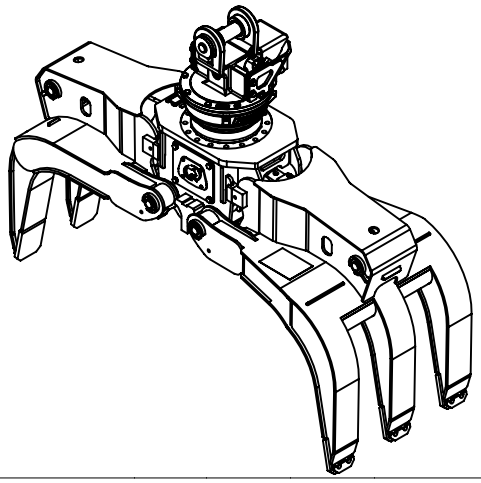

Max load:	n/a lb	n/a kg
Volume:	.75 y^3	.57 m^3
Area tip to tip:	4.31 ft^2	.40 m^2
Rotator lifting capacity:	32000 lb	14515 kg
Torque at relief pressure:	16150 lb-in 1450 psi	1825 Nm 100 bars
Weight:	1615 lb	733 kg

Rotator	**Maximum pressure:** 5000 psi 345 bars	**Recommended flow:** 9 gpm 34 l/min
Rotator recommended flow will produce a speed of 30 rpm		

Cylinder	Diameter	Recommended pressure	Pressure range	Flow range	Lock valves
Standard	3 " (76 mm)	4300 psi (296 bars)	3600-5000 psi (248-345 bars)	10-15 gpm (38-57 l/min.)	no
Standard	3 1/2 " (89 mm)	3000 psi (207 bars)	2500-3500 psi (172-241 bars)	14-21 gpm (53-79 l/min.)	no

Grapple cylinder maximum flow will theoretically produce a complete grapple open/close cycle in 4 seconds.

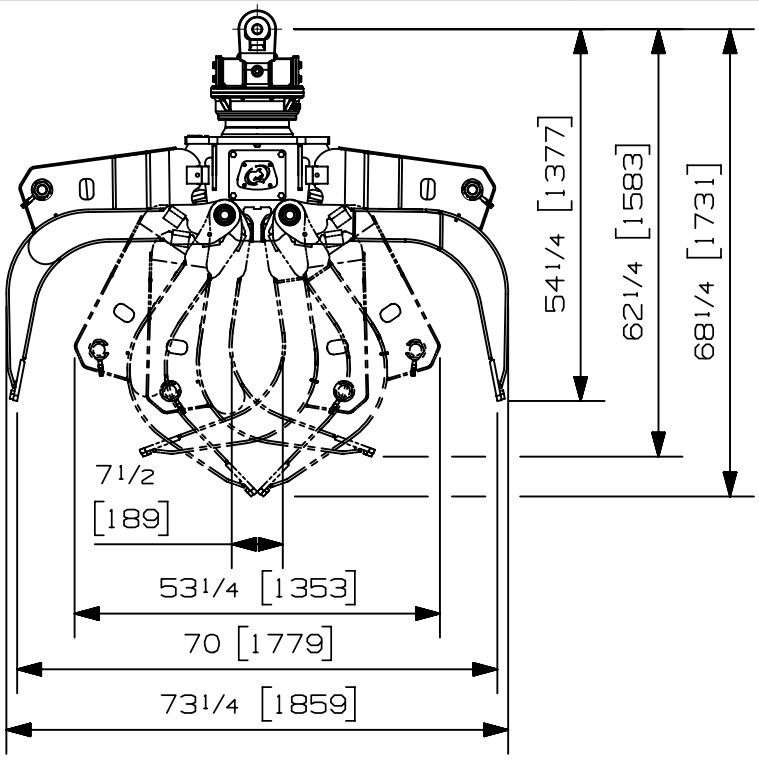

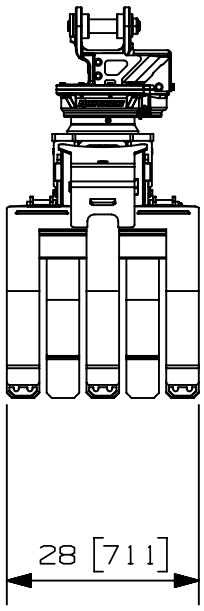

Options:
- CounterBalance valve option (9 lbs / 4kg)
-
-
-

web site: www.rotobec.com **email: rotobec@rotobec.com**

Rotobec Inc.: Head office serving OEM's and Eastern Canada Ph: (418) 383-3002 Fax: (418) 383-5334
Rotobec West: Branch serving Western Canada and Western USA Ph: (250) 765-1161 Fax: (250) 765-0035
Rotobec USA: Branch serving Eastern and Central USA Ph: (603) 444-2103 Fax: (603) 444-0327

We reserve the right to change specifications and to improve our products without notice or obligation.

07008-1771
16/03/18 D.L.

ROTOBEC
TOUGH HANDLING EQUIPMENT

Power Attachement
RPA2030D32 RGP-502

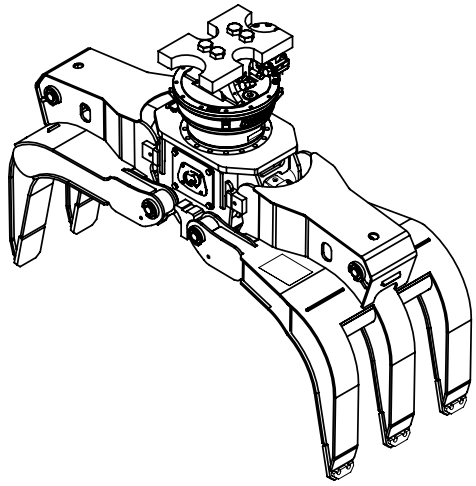

Max load:	n/a lb	n/a kg
Volume:	.75 y^3	.57 m^3
Area tip to tip:	4.31 ft^2	.40 m^2
Rotator lifting capacity:	50000 lb	22680 kg
Torque at relief pressure:	18140 lb-in 913 psi	2050 Nm 63 bars
Weight:	1760 lb	798 kg

Rotator	**Maximum pressure:** 4200 psi 290 bars	**Recommended flow:** 8 gpm 30 l/min
Rotator recommended flow will produce a speed of 15 rpm		

Cylinder	Diameter	Recommended pressure	Pressure range	Flow range	Lock valves
Standard	3 " (76 mm)	4300 psi (296 bars)	3600-5000 psi (248-345 bars)	10-15 gpm (38-57 l/min.)	no
Standard	3 1/2 " (89 mm)	3000 psi (207 bars)	2500-3500 psi (172-241 bars)	14-21 gpm (53-79 l/min.)	no

Grapple cylinder maximum flow will theoretically produce a complete grapple open/close cycle in 4 seconds.

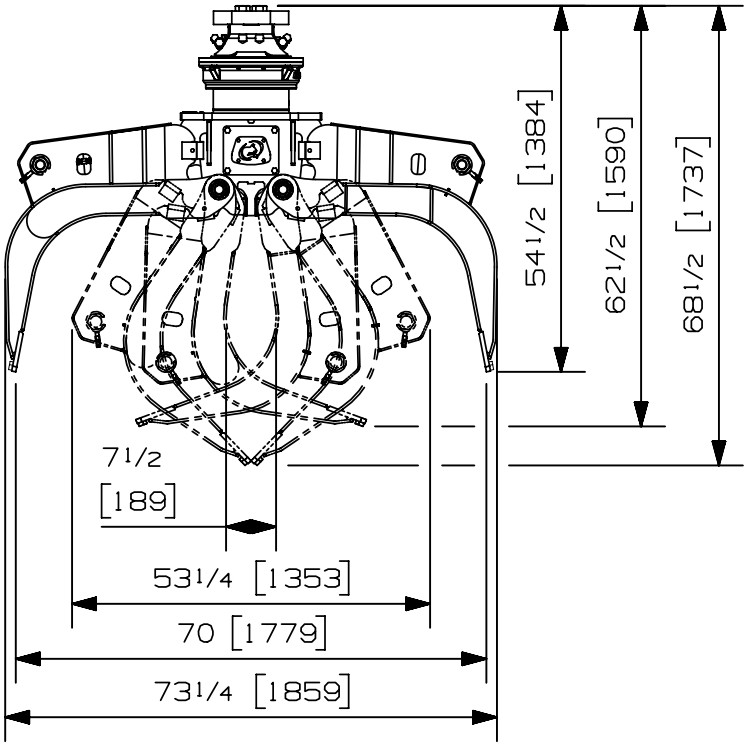

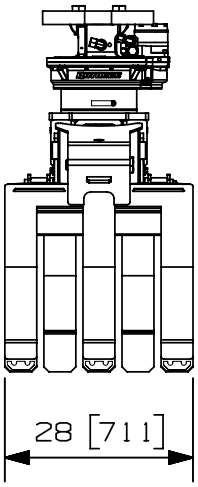

Options:
- CounterBalance valve option (9 lbs / 4 kg)
- See also RGP-502 option for more options
-
-

web site: www.rotobec.com **email: rotobec@rotobec.com**

Rotobec Inc.: Head office serving OEM's and Eastern Canada Ph: (418) 383-3002 Fax: (418) 383-5334
Rotobec West: Branch serving Western Canada and Western USA Ph: (250) 765-1161 Fax: (250) 765-0035
Rotobec USA: Branch serving Eastern and Central USA Ph: (603) 444-2103 Fax: (603) 444-0327

We reserve the right to change specifications and to improve our products without notice or obligation.

07008-0863
13/02/18 D.L.

ROTOBEC
TOUGH HANDLING EQUIPMENT

Power Attachement
RPA2030D32 RGP-1002

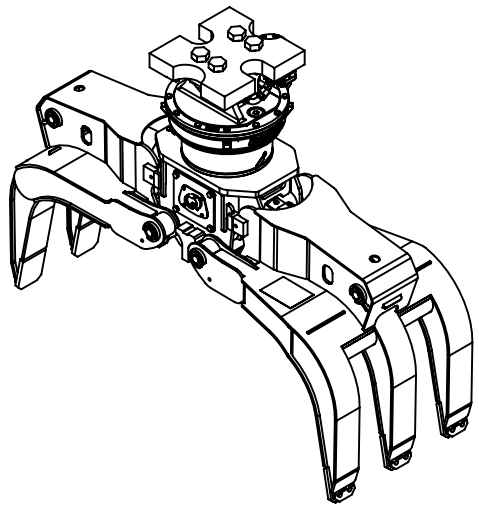

Max load:	n/a lb	n/a kg
Volume:	.75 y^3	.57 m^3
Area tip to tip:	4.31 ft^2	.40 m^2
Rotator lifting capacity:	100000 lb	45359 kg
Torque at relief pressure:	21770 lb-in 913 psi	2460 Nm 63 bars
Weight:	2030 lb	921 kg

Rotator	**Maximum pressure:** 4200 psi 290 bars	**Recommended flow:** 6 gpm 23 l/min
Rotator recommended flow will produce a speed of 10 rpm		

Cylinder	Diameter	Recommended pressure	Pressure range	Flow range	Lock valves
Standard	3 " (76 mm)	4300 psi (296 bars)	3600-5000 psi (248-345 bars)	10-15 gpm (38-57 l/min.)	no
Standard	3 1/2 " (89 mm)	3000 psi (207 bars)	2500-3500 psi (172-241 bars)	14-21 gpm (53-79 l/min.)	no

Grapple cylinder maximum flow will theoretically produce a complete grapple open/close cycle in 4 seconds.

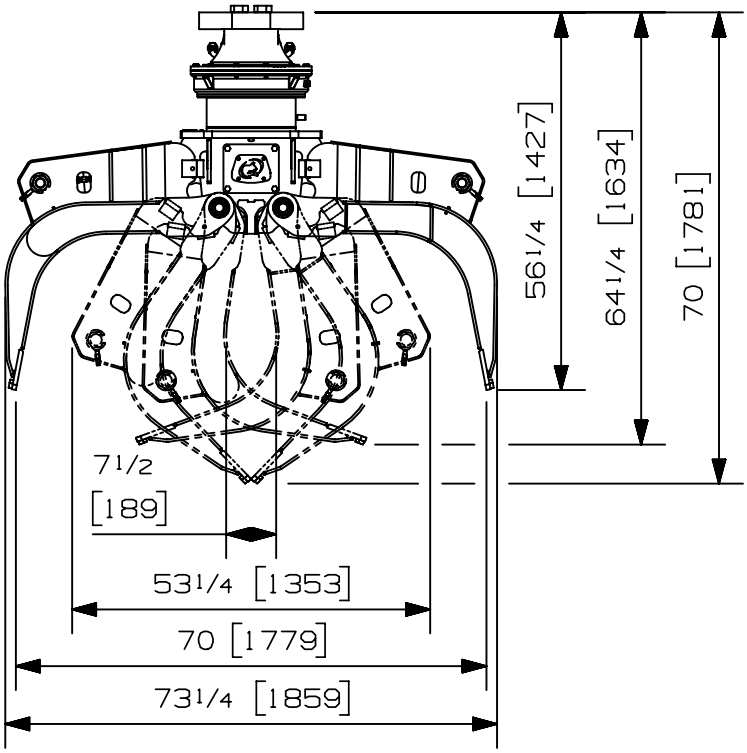

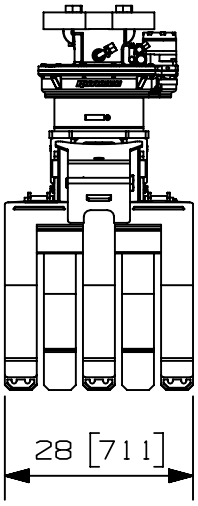

Options:
- CounterBalance valve option (9 lbs / 4 kg)
- See also RGP-1002 option for more options
-
-

web site: www.rotobec.com **email: rotobec@rotobec.com**

Rotobec Inc.: Head office serving OEM's and Eastern Canada Ph: (418) 383-3002 Fax: (418) 383-5334
Rotobec West: Branch serving Western Canada and Western USA Ph: (250) 765-1161 Fax: (250) 765-0035
Rotobec USA: Branch serving Eastern and Central USA Ph: (603) 444-2103 Fax: (603) 444-0327

We reserve the right to change specifications and to improve our products without notice or obligation.

07008-0864
13/02/18 D.L.