ROTOBEC
TOUGH HANDLING EQUIPMENT

Power Attachement
RPA4570D32 RGP-1300

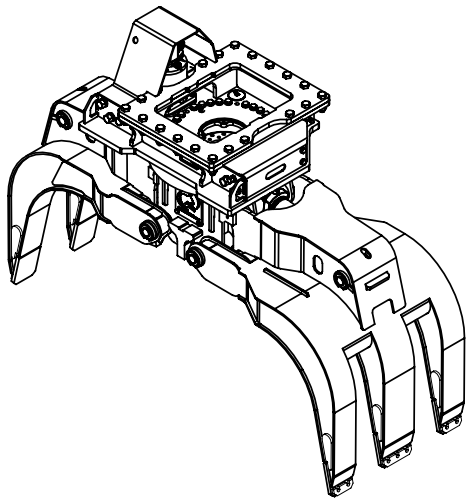

Max load:	n/a lb	n/a kg
Volume:	1.75 y^3	1.34 m^3
Area tip to tip:	7.60 ft^2	.71 m^2
Rotator lifting capacity:	130000 lb	58967 kg
Torque at relief pressure:	176750 lb-in 2200 psi	19970 Nm 152 bars
Weight:	4270 lb	1937 kg

Rotator	**Maximum pressure:** 5000 psi 345 bars	**Recommended flow:** 33 gpm 125 l/min
Rotator recommended flow will produce a speed of 15 rpm		

Cylinder	Diameter	Recommended pressure	Pressure range	Flow range	Lock valves
Standard	4 " (102 mm)	4000 psi (276 bars)	3000-5000 psi (207-345 bars)	25-37 gpm (95-140 l/min.)	no

Grapple cylinder maximum flow will theoretically produce a complete grapple open/close cycle in 4 seconds.

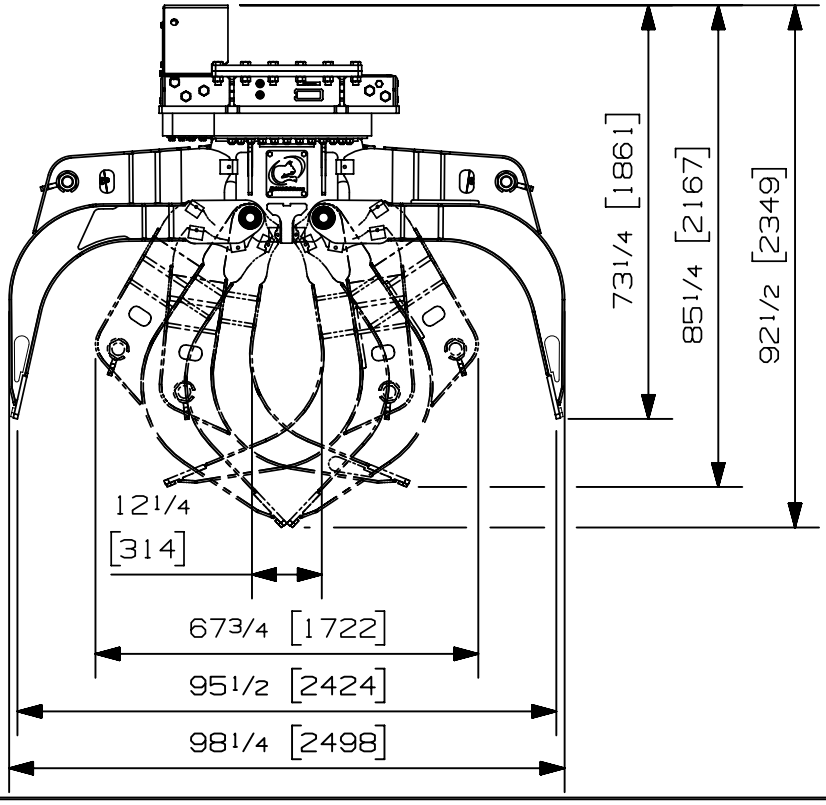

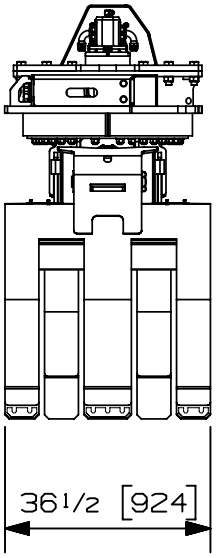

Options:
- CounterBalance valve option (20 lbs / 9 kg)
- See also RGP-1300 option for more options
-
-

web site: www.rotobec.com **email: rotobec@rotobec.com**

Rotobec Inc.: Head office serving OEM's and Eastern Canada Ph: (418) 383-3002 Fax: (418) 383-5334
Rotobec West: Branch serving Western Canada and Western USA Ph: (250) 765-1161 Fax: (250) 765-0035
Rotobec USA: Branch serving Eastern and Central USA Ph: (603) 444-2103 Fax: (603) 444-0327

We reserve the right to change specifications and to improve our products without notice or obligation.

07004-6230
06/02/18 D.L.

ROTOBEC
TOUGH HANDLING EQUIPMENT

Power Attachement
RPA4570D32 RGP-1702A

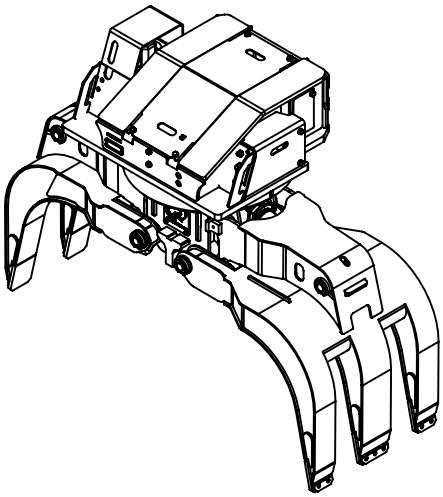

Max load:	n/a lb	n/a kg
Volume:	1.75 y^3	1.34 m^3
Area tip to tip:	7.60 ft^2	.71 m^2
Rotator lifting capacity:	170000 lb	77111 kg
Torque at relief pressure:	218520 lb-in 2200 psi	24689 Nm 152 bars
Weight:	5125 lb	2325 kg

Rotator	**Maximum pressure:** 5000 psi 345 bars	**Recommended flow:** 32 gpm 121 l/min
Rotator recommended flow will produce a speed of 12 rpm		

Cylinder	Diameter	Recommended pressure	Pressure range	Flow range	Lock valves
Standard	4 " (102 mm)	4000 psi (276 bars)	3000-5000 psi (207-345 bars)	25-37 gpm (95-140 l/min.)	no

Grapple cylinder maximum flow will theoretically produce a complete grapple open/close cycle in 4 seconds.

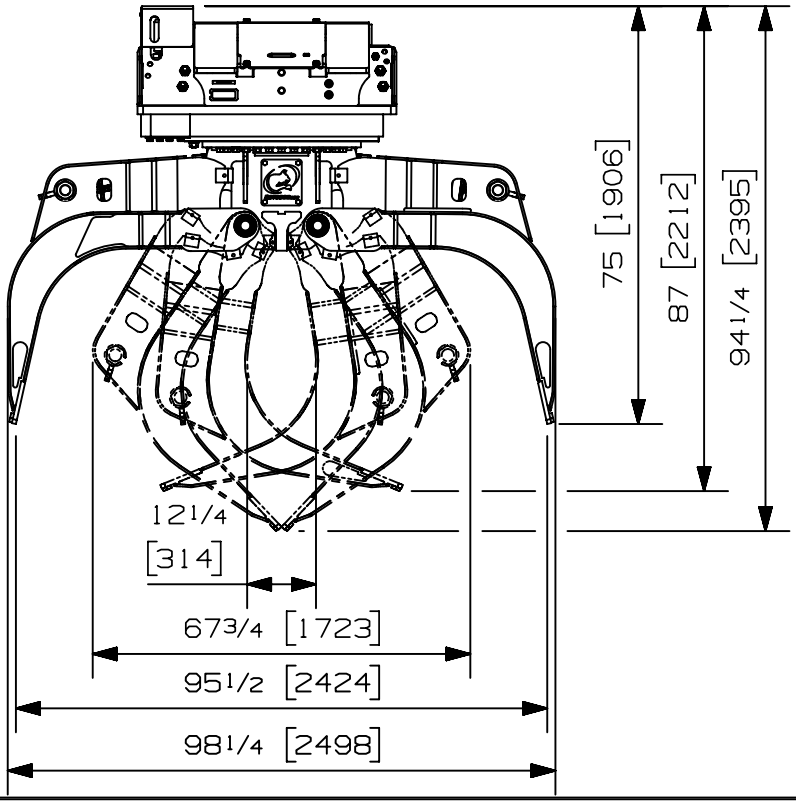

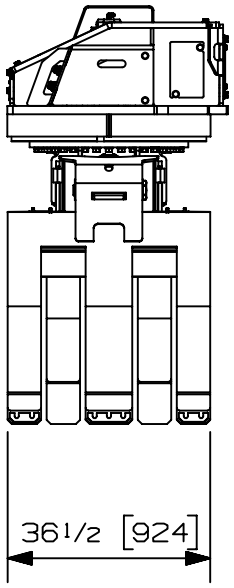

Options:
- CounterBalance valve option (20 lbs / 9 kg)
- See also RGP-1702A option for more options
-
-

web site: www.rotobec.com **email: rotobec@rotobec.com**

Rotobec Inc.: Head office serving OEM's and Eastern Canada Ph: (418) 383-3002 Fax: (418) 383-5334
Rotobec West: Branch serving Western Canada and Western USA Ph: (250) 765-1161 Fax: (250) 765-0035
Rotobec USA: Branch serving Eastern and Central USA Ph: (603) 444-2103 Fax: (603) 444-0327

We reserve the right to change specifications and to improve our products without notice or obligation.

07003-9212
29/01/18 D.L.

ROTOBEC
TOUGH HANDLING EQUIPMENT

Power Attachement
RPA4570D32 RT-504

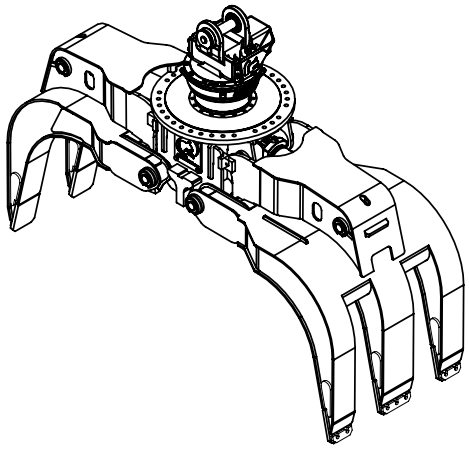

Max load:	n/a lb	n/a kg
Volume:	1.75 y^3	1.34 m^3
Area tip to tip:	7.60 ft^2	.71 m^2
Rotator lifting capacity:	50000 lb	22680 kg
Torque at relief pressure:	18630 lb-in 1450 psi	2105 Nm 100 bars
Weight:	3140 lb	1424 kg

Rotator	**Maximum pressure:** 5000 psi 345 bars	**Recommended flow:** 9 gpm 34 l/min
Rotator recommended flow will produce a speed of 25 rpm		

Cylinder	Diameter	Recommended pressure	Pressure range	Flow range	Lock valves
Standard	4 " (102 mm)	4000 psi (276 bars)	3000-5000 psi (207-345 bars)	25-37 gpm (95-140 l/min.)	no

Grapple cylinder maximum flow will theoretically produce a complete grapple open/close cycle in 4 seconds.

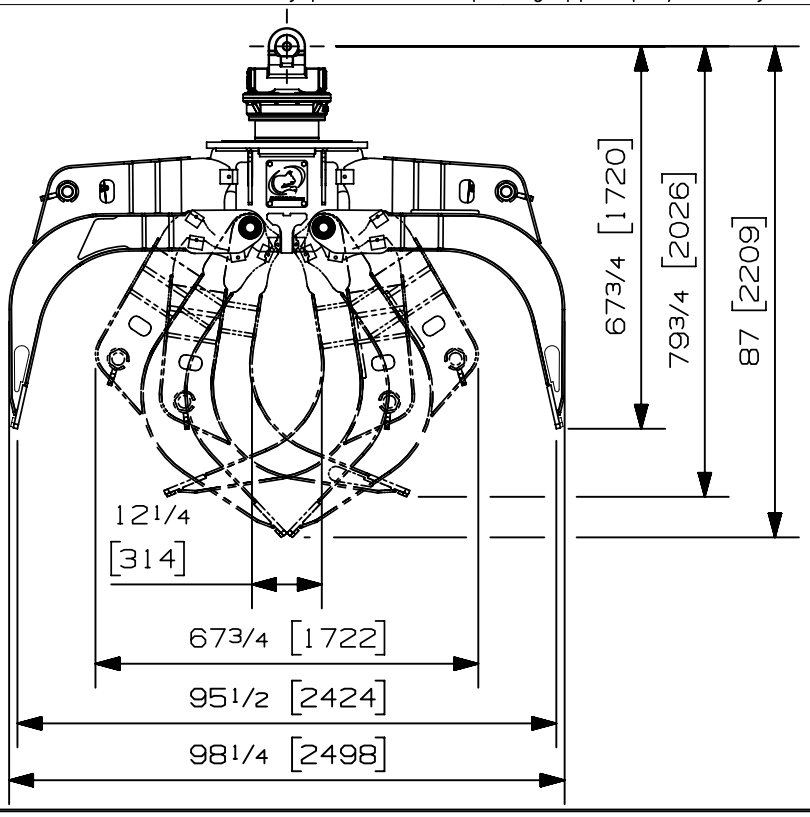

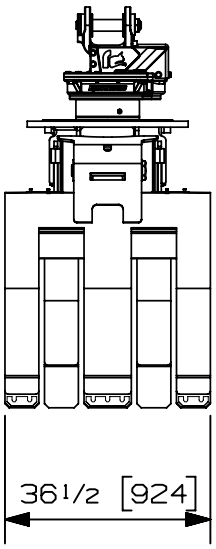

Options:
- CounterBalance valve option (20 lbs / 9 kg)
-
-
-

web site: www.rotobec.com **email: rotobec@rotobec.com**

Rotobec Inc.: Head office serving OEM's and Eastern Canada Ph: (418) 383-3002 Fax: (418) 383-5334
Rotobec West: Branch serving Western Canada and Western USA Ph: (250) 765-1161 Fax: (250) 765-0035
Rotobec USA: Branch serving Eastern and Central USA Ph: (603) 444-2103 Fax: (603) 444-0327

We reserve the right to change specifications and to improve our products without notice or obligation.

07008-0376
06/02/18 D.L.

ROTOBEC
TOUGH HANDLING EQUIPMENT

Power Attachement
RPA4570D32 RT-1004

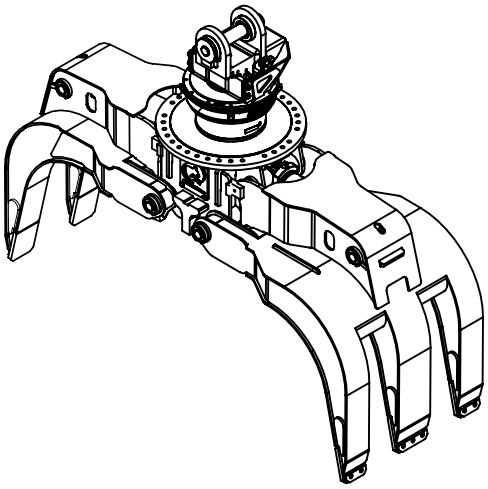

Max load:	n/a lb	n/a kg
Volume:	1.75 y^3	1.34 m^3
Area tip to tip:	7.60 ft^2	.71 m^2
Rotator lifting capacity:	100000 lb	45359 kg
Torque at relief pressure:	22360 lb-in 1450 psi	2526 Nm 100 bars
Weight:	3380 lb	1533 kg

Rotator	**Maximum pressure:** 5000 psi 345 bars	**Recommended flow:** 8 gpm 30 l/min
Rotator recommended flow will produce a speed of 20 rpm		

Cylinder	Diameter	Recommended pressure	Pressure range	Flow range	Lock valves
Standard	4 " (102 mm)	4000 psi (276 bars)	3000-5000 psi (207-345 bars)	25-37 gpm (95-140 l/min.)	no

Grapple cylinder maximum flow will theoretically produce a complete grapple open/close cycle in 4 seconds.

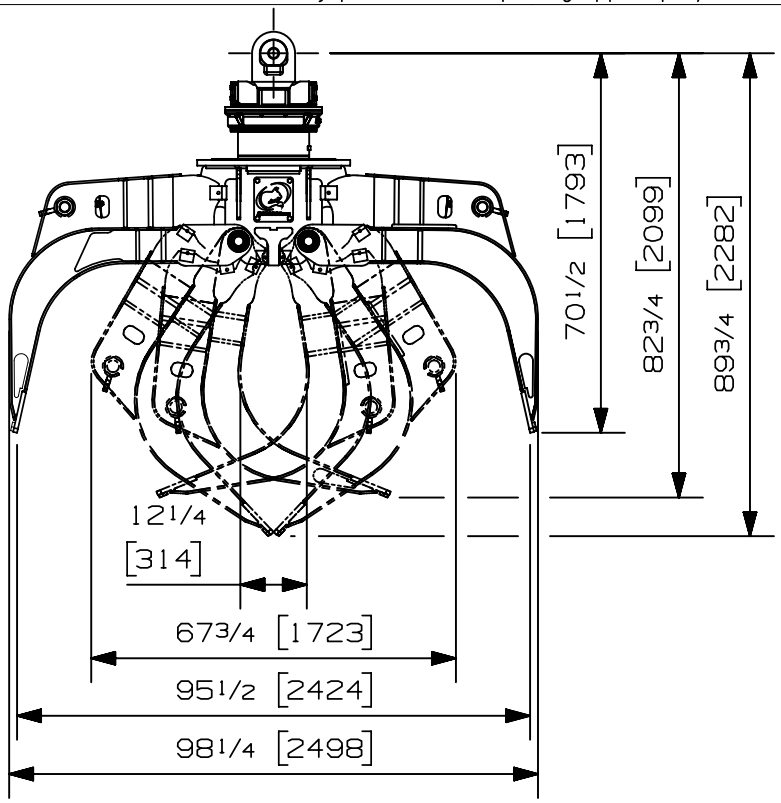

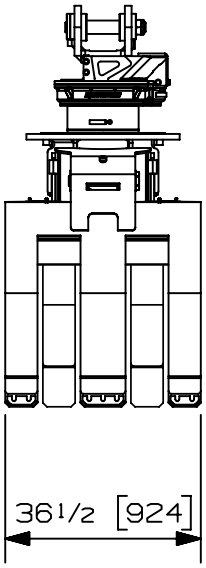

Options:
- CounterBalance valve option (20 lbs / 9 kg)
-
-
-

web site: www.rotobec.com **email: rotobec@rotobec.com**

Rotobec Inc.: Head office serving OEM's and Eastern Canada Ph: (418) 383-3002 Fax: (418) 383-5334
Rotobec West: Branch serving Western Canada and Western USA Ph: (250) 765-1161 Fax: (250) 765-0035
Rotobec USA: Branch serving Eastern and Central USA Ph: (603) 444-2103 Fax: (603) 444-0327

We reserve the right to change specifications and to improve our products without notice or obligation.

07008-0849
06/02/18 D.L.