ROTOBEC
TOUGH HANDLING EQUIPMENT

Power Attachment
RPA3045R32 RGP-900

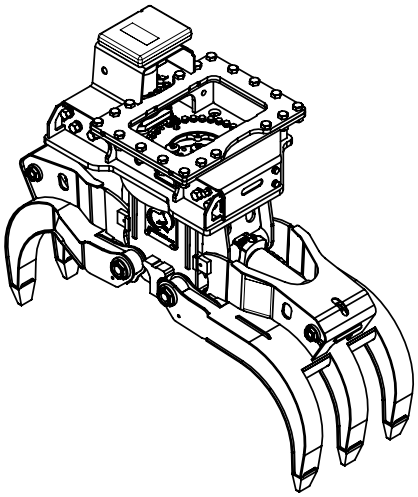

Max load:	n/a lb	n/a kg
Volume:	.25 cord of 8 ft	.91 m^3
Area tip to tip:	4.00 ft^2	.37 m^2
Rotator lifting capacity:	90000 lb	40823 kg
Torque at relief pressure:	148710 lb-in 2200 psi	16802 Nm 152 bars
Weight:	2640 lb	1197 kg

Rotator	**Maximum pressure:** 5000 psi 345 bars	**Recommended flow:** 28 gpm 106 l/min
Rotator recommended flow will produce a maximum speed of 15 rpm		

Cylinder	Diameter	Recommended pressure	Pressure range	Flow range	Lock valves
Standard	3 1/2 " (89 mm)	4000 psi (276 bars)	3000-5000 psi (207-345 bars)	14-20 gpm (53-76 l/min.)	no

Grapple cylinder maximum flow will theoretically produce a complete grapple open/close cycle in 4 seconds.

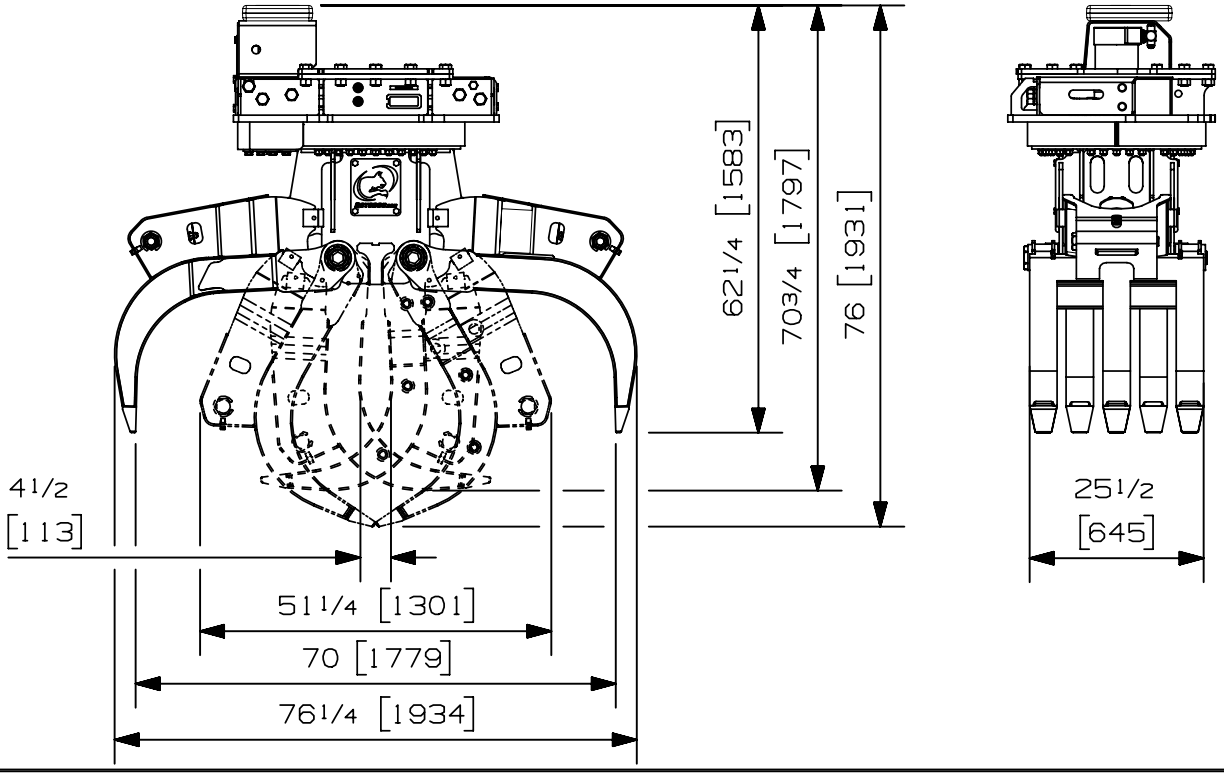

Options:

- Mini heel set (73 lbs / 33 kg)
- Load holding valve (20 lbs / 9 kg)
- Synchronisation + CounterBalance valve option (N/D)
- Saw bundle 404 (saw inclued) (520 lbs / 236 kg)
- Saw bundle 750 (saw inclued) (760 lbs / 345 kg)
- See also RGP-900 for more options

web site: www.rotobec.com **email: rotobec@rotobec.com**

Rotobec Inc.: Head office serving OEM's and Eastern Canada Ph: (418) 383-3002 Fax: (418) 383-5334
Rotobec West: Branch serving Western Canada and Western USA Ph: (250) 765-1161 Fax: (250) 765-0035
Rotobec USA: Branch serving Eastern and Central USA Ph: (603) 444-2103 Fax: (603) 444-0327

We reserve the right to change specifications and to improve our products without notice or obligation.

07006-2588
20/11/18 D.L.

ROTOBEC
TOUGH HANDLING EQUIPMENT

Power Attachment
RPA3045R32 RGP-1300A

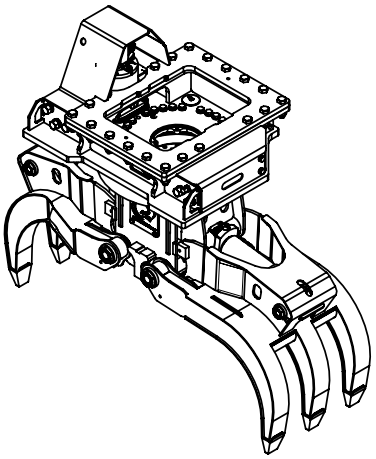

Max load:	n/a lb	n/a kg
Volume:	.25 cord of 8 ft	.91 m^3
Area tip to tip:	4.00 ft^2	.37 m^2
Rotator lifting capacity:	130000 lb	58967 kg
Torque at relief pressure:	176750 lb-in 2200 psi	19970 Nm 152 bars
Weight:	3160 lb	1433 kg

Rotator	**Maximum pressure:** 5000 psi 345 bars	**Recommended flow:** 33 gpm 125 l/min
Rotator recommended flow will produce a maximum speed of 15 rpm		

Cylinder	Diameter	Recommended pressure	Pressure range	Flow range	Lock valves
Standard	3 1/2 " (89 mm)	4000 psi (276 bars)	3000-5000 psi (207-345 bars)	14-20 gpm (53-76 l/min.)	no

Grapple cylinder maximum flow will theoretically produce a complete grapple open/close cycle in 4 seconds.

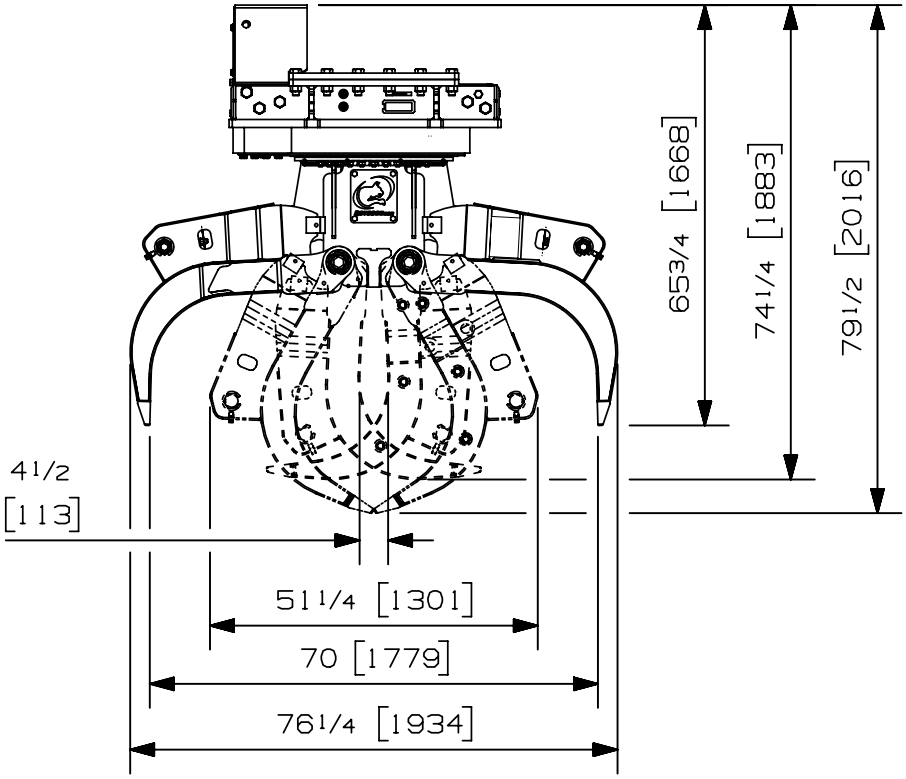

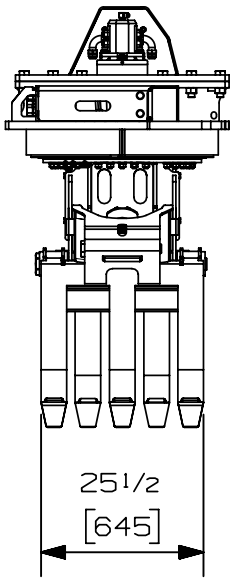

Options:

- Mini heel set (73 lbs / 33 kg)
- Load holding valve (20 lbs / 9 kg)
- Synchronisation + CounterBalance valve option (N/D)
- Saw bundle 404 (saw inclued) (520 lbs / 236 kg)
- Saw bundle 750 (saw inclued) (760 lbs / 345 kg)
- See also RGP-1300 for more options

web site: www.rotobec.com **email: rotobec@rotobec.com**

Rotobec Inc.: Head office serving OEM's and Eastern Canada Ph: (418) 383-3002 Fax: (418) 383-5334
Rotobec West: Branch serving Western Canada and Western USA Ph: (250) 765-1161 Fax: (250) 765-0035
Rotobec USA: Branch serving Eastern and Central USA Ph: (603) 444-2103 Fax: (603) 444-0327

We reserve the right to change specifications and to improve our products without notice or obligation.

07009-3498
14/06/19

ROTOBEC
TOUGH HANDLING EQUIPMENT

Power Attachment
RPA3045R32 RT-504

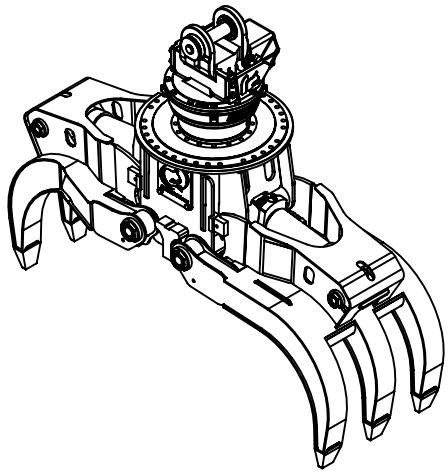

Max load:	n/a lb	n/a kg
Volume:	.25 cord of 8 ft	.91 m^3
Area tip to tip:	4.00 ft^2	.37 m^2
Rotator lifting capacity:	50000 lb	22680 kg
Torque at relief pressure:	18630 lb-in 1450 psi	2105 Nm 100 bars
Weight:	1935 lb	878 kg

Rotator	**Maximum pressure:** 5000 psi 345 bars	**Recommended flow:** 9 gpm 34 l/min
Rotator recommended flow will produce a speed of 25 rpm		

Cylinder	Diameter	Recommended pressure	Pressure range	Flow range	Lock valves
Standard	3 1/2 " (89 mm)	4000 psi (276 bars)	3000-5000 psi (207-345 bars)	14-20 gpm (53-76 l/min.)	no

Grapple cylinder maximum flow will theoretically produce a complete grapple open/close cycle in 4 seconds.

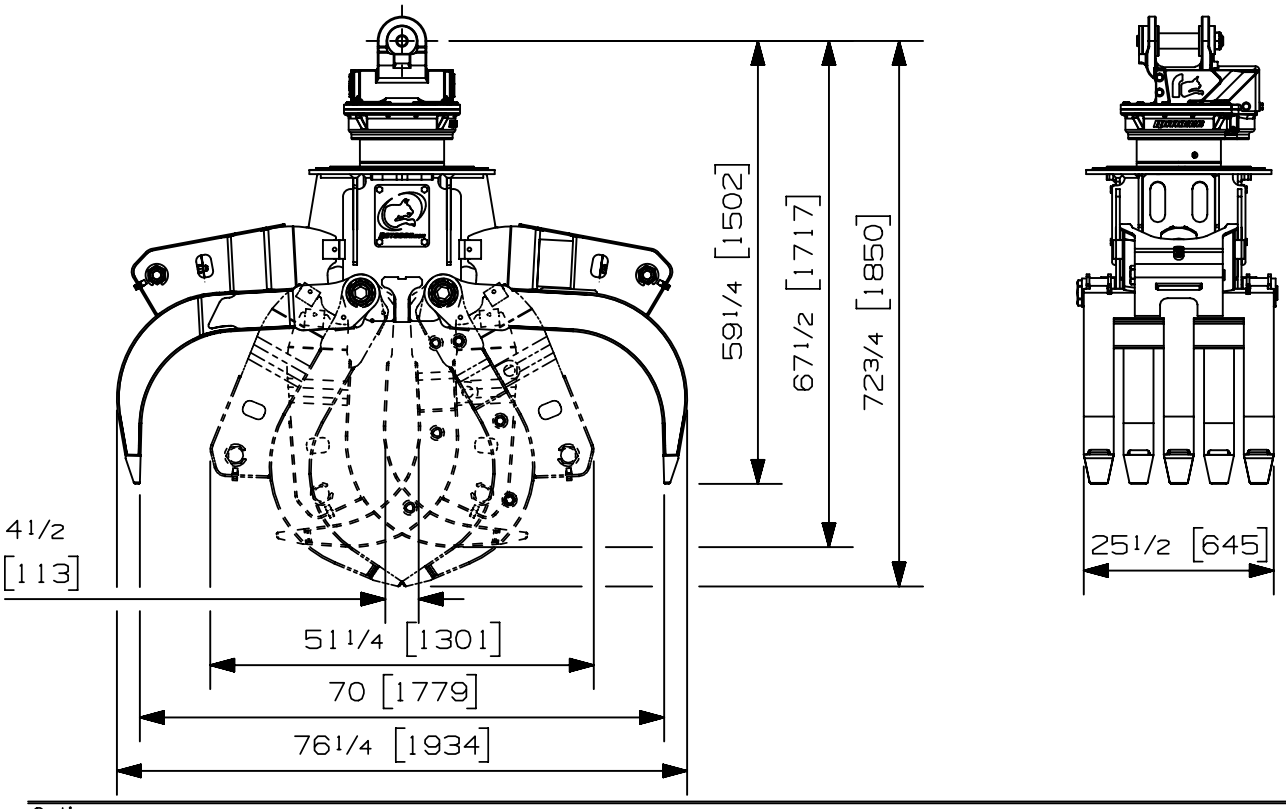

Options:
- Mini heel set (73 lbs / 33 kg)
- Load holding valve (20 lbs / 9 kg)
- Synchronisation + CounterBalance valve option (N/D)
- Saw bundle 404 (saw inclued) (520 lbs / 236 kg)
- Saw bundle 750 (saw inclued) (760 lbs / 345 kg)

web site: www.rotobec.com **email: rotobec@rotobec.com**

Rotobec Inc.: Head office serving OEM's and Eastern Canada Ph: (418) 383-3002 Fax: (418) 383-5334
Rotobec West: Branch serving Western Canada and Western USA Ph: (250) 765-1161 Fax: (250) 765-0035
Rotobec USA: Branch serving Eastern and Central USA Ph: (603) 444-2103 Fax: (603) 444-0327

We reserve the right to change specifications and to improve our products without notice or obligation.

07008-7294
19/11/18 D.L.

ROTOBEC
TOUGH HANDLING EQUIPMENT

Power Attachment
RPA3045R43 RGP-900

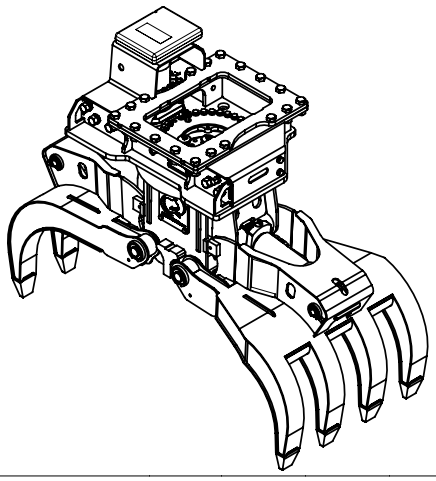

Max load:	n/a lb	n/a kg
Volume:	.25 cord of 8 ft	.91 m^3
Area tip to tip:	4.00 ft^2	.37 m^2
Rotator lifting capacity:	90000 lb	40823 kg
Torque at relief pressure:	148710 lb-in 2200 psi	16802 Nm 152 bars
Weight:	2760 lb	1252 kg

Rotator	**Maximum pressure:** 5000 psi 345 bars	**Recommended flow:** 28 gpm 106 l/min
Rotator recommended flow will produce a maximum speed of 15 rpm		

Cylinder	Diameter	Recommended pressure	Pressure range	Flow range	Lock valves
Standard	3 1/2 " (89 mm)	4000 psi (276 bars)	3000-5000 psi (207-345 bars)	14-20 gpm (53-76 l/min.)	no

Grapple cylinder maximum flow will theoretically produce a complete grapple open/close cycle in 4 seconds.

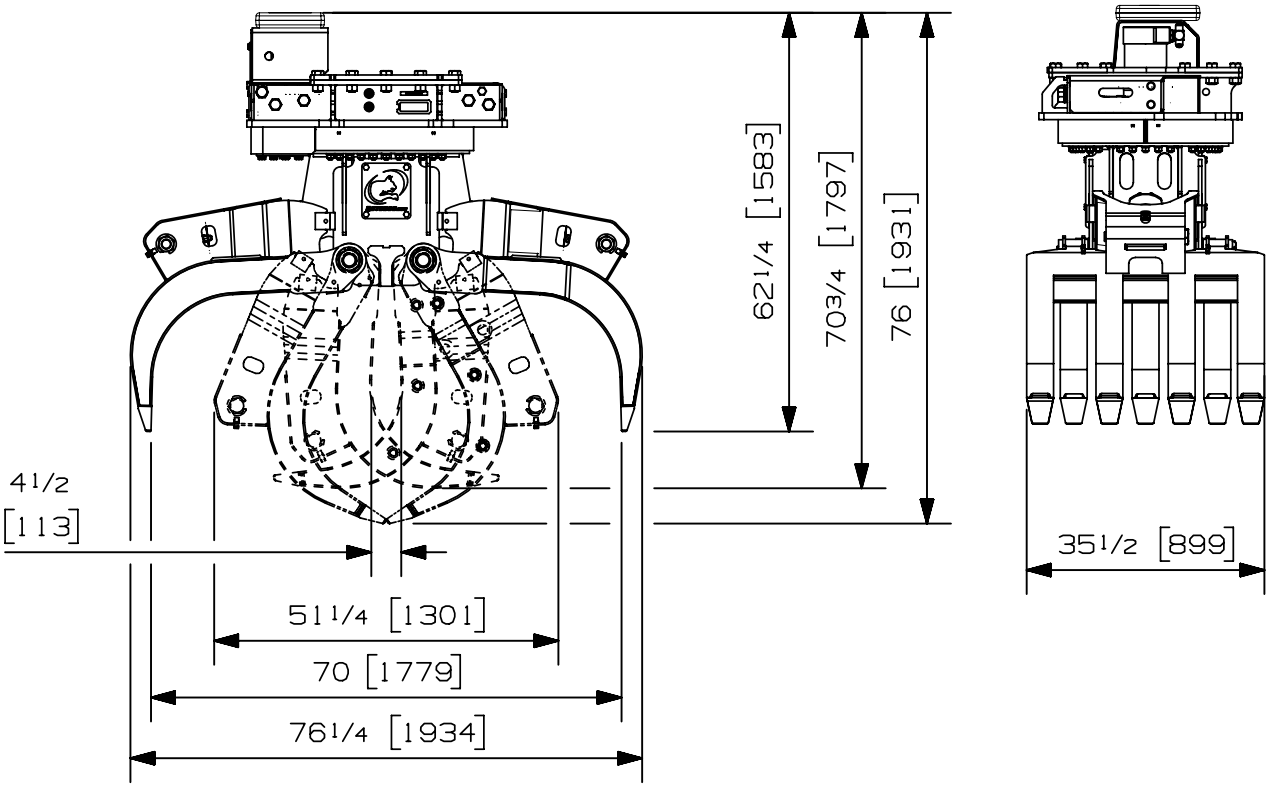

Options:

- Mini heel set (73 lbs / 33 kg)
- Load holding valve (20 lbs / 9 kg)
- Synchronisation + CounterBalance valve option (N/D)
- Saw bundle 404 (saw inclued) (520 lbs / 236 kg)
- Saw bundle 750 (saw inclued) (760 lbs / 345 kg)
- See also RGP-900 for more options

web site: www.rotobec.com **email: rotobec@rotobec.com**

Rotobec Inc.: Head office serving OEM's and Eastern Canada Ph: (418) 383-3002 Fax: (418) 383-5334
Rotobec West: Branch serving Western Canada and Western USA Ph: (250) 765-1161 Fax: (250) 765-0035
Rotobec USA: Branch serving Eastern and Central USA Ph: (603) 444-2103 Fax: (603) 444-0327

We reserve the right to change specifications and to improve our products without notice or obligation.

07008-0459
23/11/18 D.L.

ROTOBEC
TOUGH HANDLING EQUIPMENT

Power Attachment
RPA3045R43 RGP-1300A

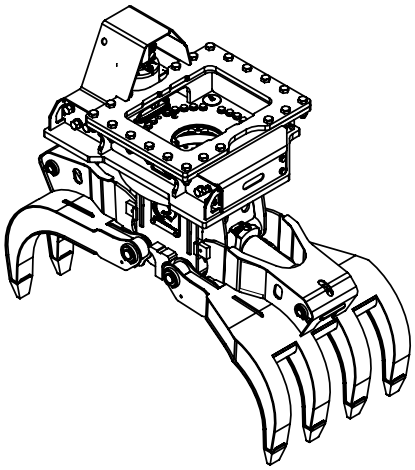

Max load:	n/a lb	n/a kg
Volume:	.25 cord of 8 ft	.91 m^3
Area tip to tip:	4.00 ft^2	.37 m^2
Rotator lifting capacity:	130000 lb	58967 kg
Torque at relief pressure:	176750 lb-in 2200 psi	19970 Nm 152 bars
Weight:	3280 lb	1488 kg

Rotator	**Maximum pressure:** 5000 psi 345 bars	**Recommended flow:** 33 gpm 125 l/min
Rotator recommended flow will produce a maximum speed of 15 rpm		

Cylinder	Diameter	Recommended pressure	Pressure range	Flow range	Lock valves
Standard	3 1/2 " (89 mm)	4000 psi (276 bars)	3000-5000 psi (207-345 bars)	14-20 gpm (53-76 l/min.)	no

Grapple cylinder maximum flow will theoretically produce a complete grapple open/close cycle in 4 seconds.

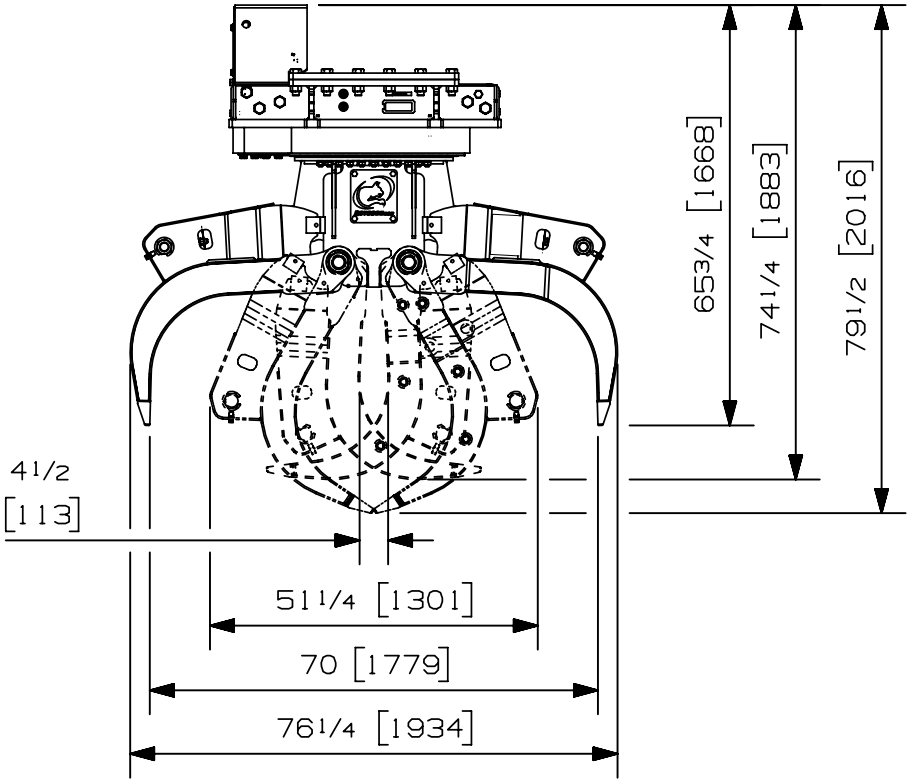

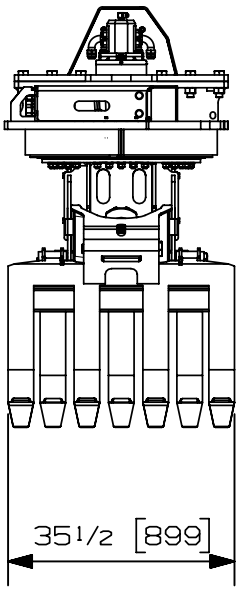

Options:

- Mini heel set (73 lbs / 33 kg)
- Load holding valve (20 lbs / 9 kg)
- Synchronisation + CounterBalance valve option (N/D)
- Saw bundle 404 (saw inclued) (520 lbs / 236 kg)
- Saw bundle 750 (saw inclued) (760 lbs / 345 kg)
- See also RGP-1300 for more options

web site: www.rotobec.com **email: rotobec@rotobec.com**

Rotobec Inc.: Head office serving OEM's and Eastern Canada Ph: (418) 383-3002 Fax: (418) 383-5334
Rotobec West: Branch serving Western Canada and Western USA Ph: (250) 765-1161 Fax: (250) 765-0035
Rotobec USA: Branch serving Eastern and Central USA Ph: (603) 444-2103 Fax: (603) 444-0327

We reserve the right to change specifications and to improve our products without notice or obligation.

07008-0462
22/11/18 D.L.

ROTOBEC
TOUGH HANDLING EQUIPMENT

Power Attachment
RPA3045R43 RT-504

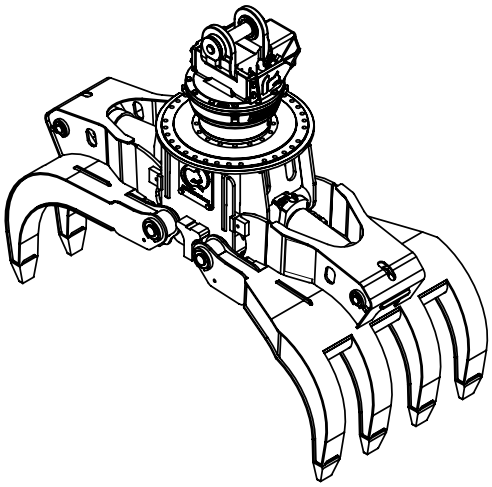

Max load:	n/a lb	n/a kg
Volume:	.25 cord of 8 ft	.91 m³
Area tip to tip:	4.00 ft²	.37 m²
Rotator lifting capacity:	50000 lb	22680 kg
Torque at relief pressure:	18630 lb-in 1450 psi	2105 Nm 100 bars
Weight:	2055 lb	932 kg

Rotator	**Maximum pressure:** 5000 psi 345 bars	**Recommended flow:** 9 gpm 34 l/min
Rotator recommended flow will produce a maximum speed of 25 rpm		

Cylinder	Diameter	Recommended pressure	Pressure range	Flow range	Lock valves
Standard	3 1/2 " (89 mm)	4000 psi (276 bars)	3000-5000 psi (207-345 bars)	14-20 gpm (53-76 l/min.)	no

Grapple cylinder maximum flow will theoretically produce a complete grapple open/close cycle in 4 seconds.

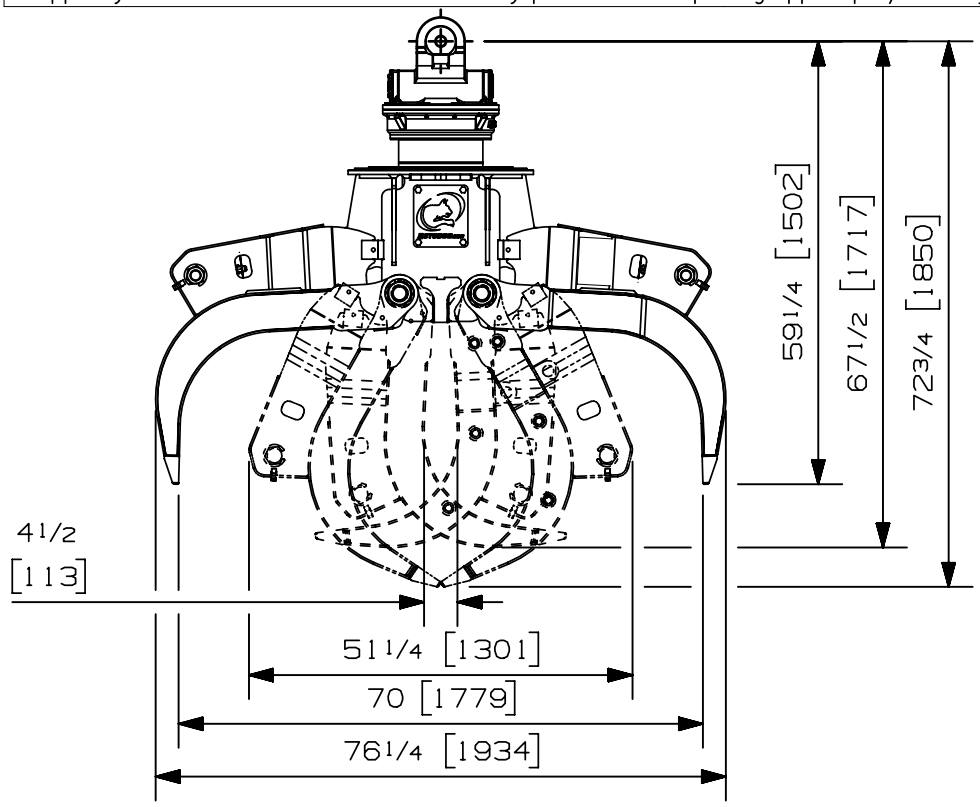

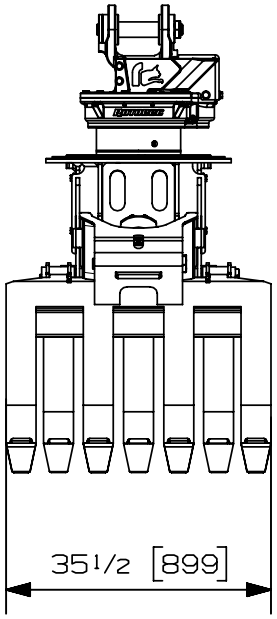

Options:
- Mini heel set (73 lbs / 33 kg)
- Load holding valve (20 lbs / 9 kg)
- Synchronisation + CounterBalance valve option (N/D)
- Saw bundle 404 (saw inclued) (520 lbs / 236 kg)
- Saw bundle 750 (saw inclued) (760 lbs / 345 kg)

web site: www.rotobec.com **email: rotobec@rotobec.com**

Rotobec Inc.: Head office serving OEM's and Eastern Canada Ph: (418) 383-3002 Fax: (418) 383-5334
Rotobec West: Branch serving Western Canada and Western USA Ph: (250) 765-1161 Fax: (250) 765-0035
Rotobec USA: Branch serving Eastern and Central USA Ph: (603) 444-2103 Fax: (603) 444-0327

We reserve the right to change specifications and to improve our products without notice or obligation.

07006-2589
20/11/18 D.L.

ROTOBEC
TOUGH HANDLING EQUIPMENT

Power Attachment
RPA3045R43 RT-1004

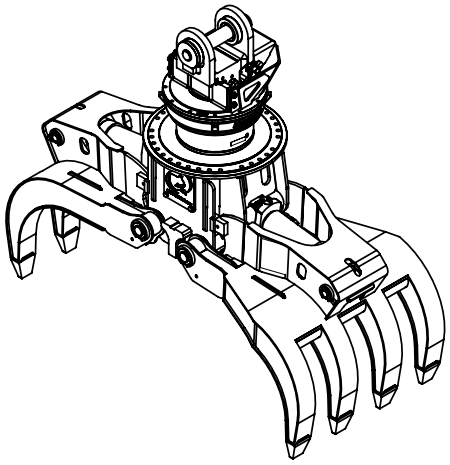

Max load:	n/a lb	n/a kg
Volume:	.25 cord of 8 ft	.91 m^3
Area tip to tip:	4.00 ft^2	.37 m^2
Rotator lifting capacity:	100000 lb	45359 kg
Torque at relief pressure:	22360 lb-in 1450 psi	2526 Nm 100 bars
Weight:	2295 lb	1041 kg

Rotator	**Maximum pressure:** 5000 psi 345 bars	**Recommended flow:** 8 gpm 30 l/min
Rotator recommended flow will produce a speed of 20 rpm		

Cylinder	Diameter	Recommended pressure	Pressure range	Flow range	Lock valves
Standard	3 1/2 " (89 mm)	4000 psi (276 bars)	3000-5000 psi (207-345 bars)	14-20 gpm (53-76 l/min.)	no

Grapple cylinder maximum flow will theoretically produce a complete grapple open/close cycle in 4 seconds.

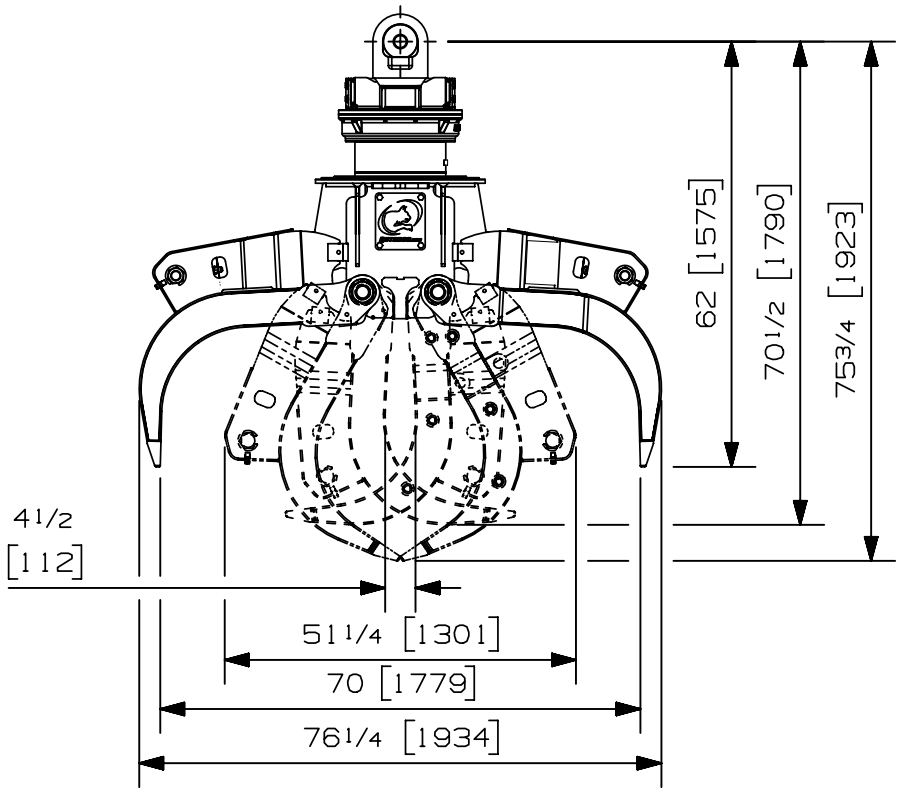

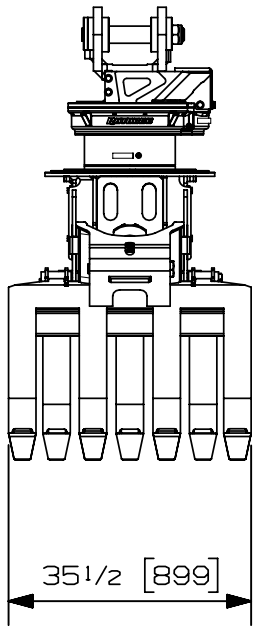

Options:

- Mini heel set (73 lbs / 33 kg)
- Load holding valve (20 lbs / 9 kg)
- Synchronisation + CounterBalance valve option (N/D)
- Saw bundle 404 (saw inclued) (520 lbs / 236 kg)
- Saw bundle 750 (saw inclued) (760 lbs / 345 kg)

web site: www.rotobec.com **email: rotobec@rotobec.com**

Rotobec Inc.: Head office serving OEM's and Eastern Canada Ph: (418) 383-3002 Fax: (418) 383-5334
Rotobec West: Branch serving Western Canada and Western USA Ph: (250) 765-1161 Fax: (250) 765-0035
Rotobec USA: Branch serving Eastern and Central USA Ph: (603) 444-2103 Fax: (603) 444-0327

We reserve the right to change specifications and to improve our products without notice or obligation.

07008-7298
22/11/18 D.L.

ROTOBEC
TOUGH HANDLING EQUIPMENT

Power Attachment
RPA3045R43

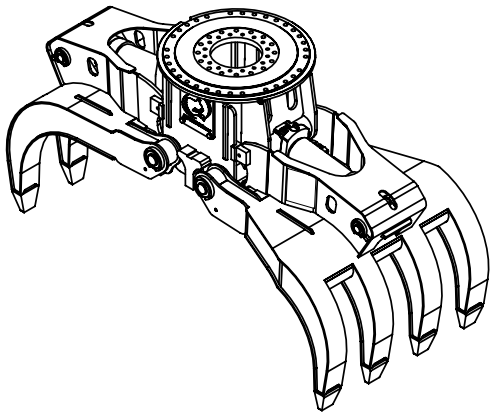

Max load:	- lb	- kg
Volume:	.25 cord of 8 ft	.91 m^3
Area tip to tip:	4.00 ft^2	.37 m^2
Rotator lifting capacity:	- lb	- kg
Torque at relief pressure:	- lb-in - psi	- Nm - bars
Weight:	1610 lb	730 kg

Rotator	**Maximum pressure:** - psi - bars	**Recommended flow:** - gpm - l/min
Rotator recommended flow will produce a maximum speed of 0 rpm		

Cylinder	Diameter	Recommended pressure	Pressure range	Flow range	Lock valves
Standard	3 1/2 " (89 mm)	4000 psi (276 bars)	3000 - 5000 psi (207-345 bars)	14 - 20 gpm (53-76 l/min.)	No

Grapple cylinder maximum flow will theoretically produce a complete grapple open/close cycle in 4 seconds.

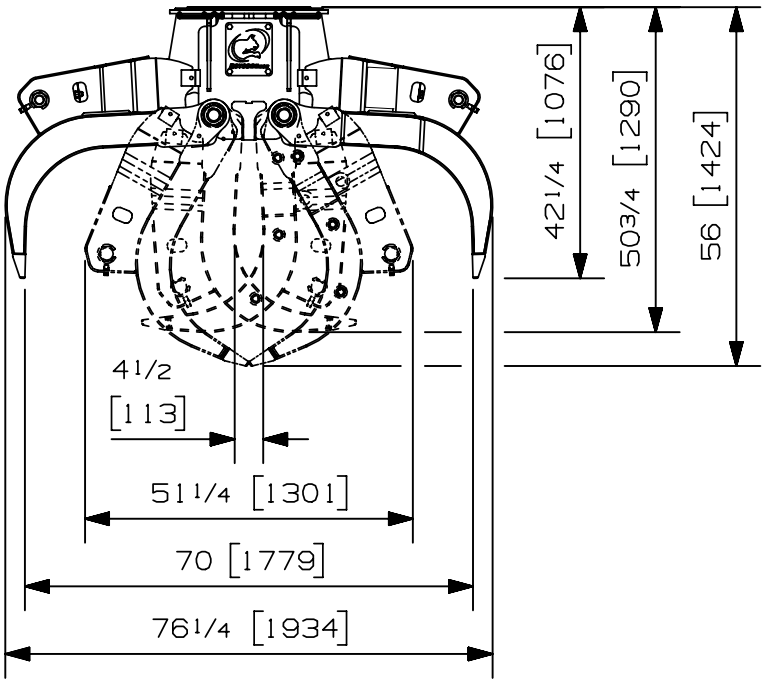

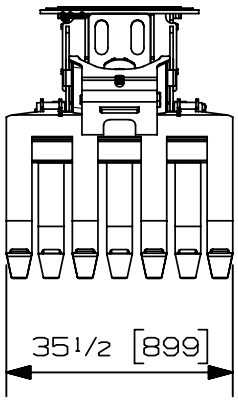

Options:
- Mini heel set (73 lbs / 33 kg)
- Load holding valve (20 lbs / 9 kg)
- Synchronisation + CounterBalance valve option (N/D)
- Saw bundle 404 (saw inclued) (520 lbs / 236 kg)
- Saw bundle 750 (saw inclued) (760 lbs / 345 kg)

web site: www.rotobec.com **email: rotobec@rotobec.com**

Rotobec Inc.: Head office serving OEM's and Eastern Canada Ph: (418) 383-3002 Fax: (418) 383-5334
Rotobec West: Branch serving Western Canada and Western USA Ph: (250) 765-1161 Fax: (250) 765-0035
Rotobec USA: Branch serving Eastern and Central USA Ph: (603) 444-2103 Fax: (603) 444-0327

We reserve the right to change specifications and to improve our products without notice or obligation.

07009-2665
23/05/19 A.P.