ROTOBEC
TOUGH HANDLING EQUIPMENT

# Power Attachement
## RPA4570R32 RGP-1300

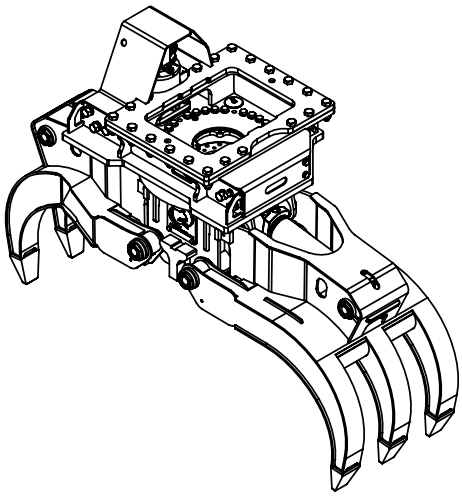

| | | |
|---|---|---|
| **Max load:** | n/a lb | n/a kg |
| **Volume:** | .38 cord of 8 ft | 1.38 $m^3$ |
| **Area tip to tip:** | 6.00 $ft^2$ | .56 $m^2$ |
| **Rotator lifting capacity:** | 130000 lb | 58967 kg |
| **Torque at relief pressure:** | 176750 lb-in<br>2200 psi | 19970 Nm<br>152 bars |
| **Weight:** | 3940 lb | 1787 kg |

| | | |
|---|---|---|
| **Rotator** | **Maximum pressure:** 5000 psi 345 bars | **Recommended flow:** 33 gpm 125 l/min |
| Rotator recommended flow will produce a speed of 15 rpm | | |

| Cylinder | Diameter | Recommended pressure | Pressure range | Flow range | Lock valves |
|---|---|---|---|---|---|
| Standard | 4 " (102 mm) | 4000 psi (276 bars) | 3000-5000 psi (207-345 bars) | 25-37 gpm (95-140 l/min.) | no |

Grapple cylinder maximum flow will theoretically produce a complete grapple open/close cycle in 4 seconds.

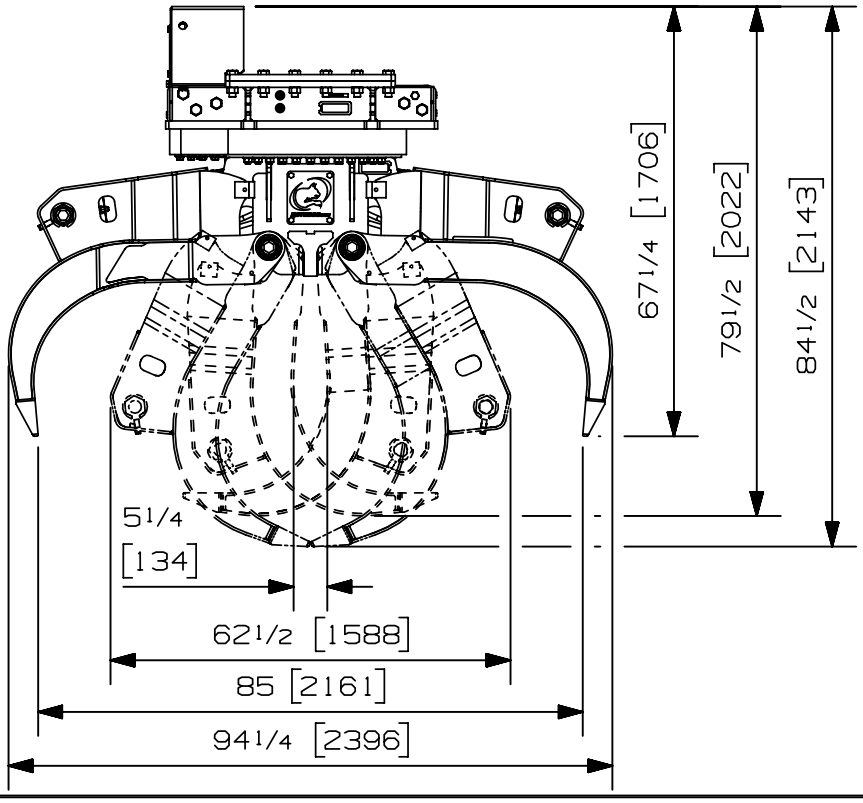


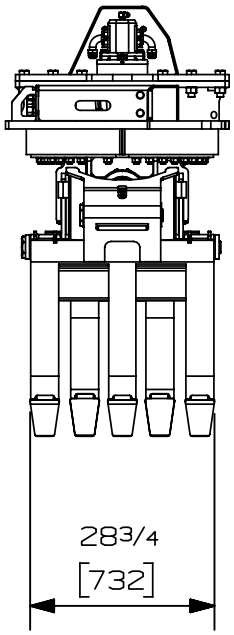


Options:

- Mini heel set (76 lbs / 34 kg)
- CounterBalance valve option (20 lbs / 9 kg)
- Synchronisation + CounterBalance valve option (N/D)
- 
- Saw bundle 404 (saw inclued) (545 lbs / 247 kg)
- Saw bundle 750 (saw inclued) (785 lbs / 356 kg)
- See also RGP-1300 option for more options


**web site: www.rotobec.com** **email: rotobec@rotobec.com**

**Rotobec Inc.:** Head office serving OEM's and Eastern Canada Ph: (418) 383-3002 Fax: (418) 383-5334
**Rotobec West:** Branch serving Western Canada and Western USA Ph: (250) 765-1161 Fax: (250) 765-0035
**Rotobec USA:** Branch serving Eastern and Central USA Ph: (603) 444-2103 Fax: (603) 444-0327



We reserve the right to change specifications and to improve our products without notice or obligation.



07004-3234
24/01/18 D.L.

ROTOBEC
TOUGH HANDLING EQUIPMENT

# Power Attachement
## RPA4570R32 RT-1004

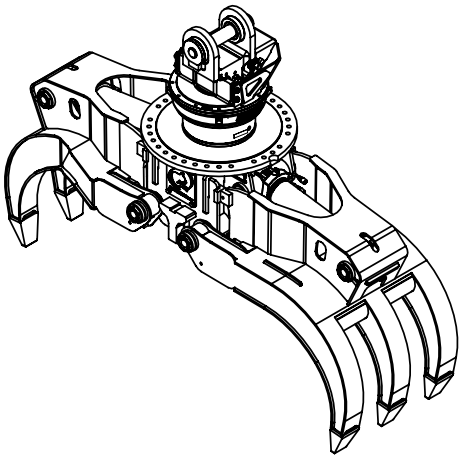

| | | |
|---|---|---|
| **Max load:** | n/a lb | n/a kg |
| **Volume:** | .38 cord of 8 ft | 1.38 $m^3$ |
| **Area tip to tip:** | 6.00 $ft^2$ | .56 $m^2$ |
| **Rotator lifting capacity:** | 100000 lb | 45359 kg |
| **Torque at relief pressure:** | 22360 lb-in<br>1450 psi | 2526 Nm<br>100 bars |
| **Weight:** | 3050 lb | 1383 kg |

| | | |
|---|---|---|
| **Rotator** | **Maximum pressure:** 5000 psi 345 bars | **Recommended flow:** 8 gpm 30 l/min |
| Rotator recommended flow will produce a speed of 20 rpm | | |

| Cylinder | Diameter | Recommended pressure | Pressure range | Flow range | Lock valves |
|---|---|---|---|---|---|
| Standard | 4 " (102 mm) | 4000 psi (276 bars) | 3000-5000 psi (207-345 bars) | 25-37 gpm (95-140 l/min.) | no |

Grapple cylinder maximum flow will theoretically produce a complete grapple open/close cycle in 4 seconds.

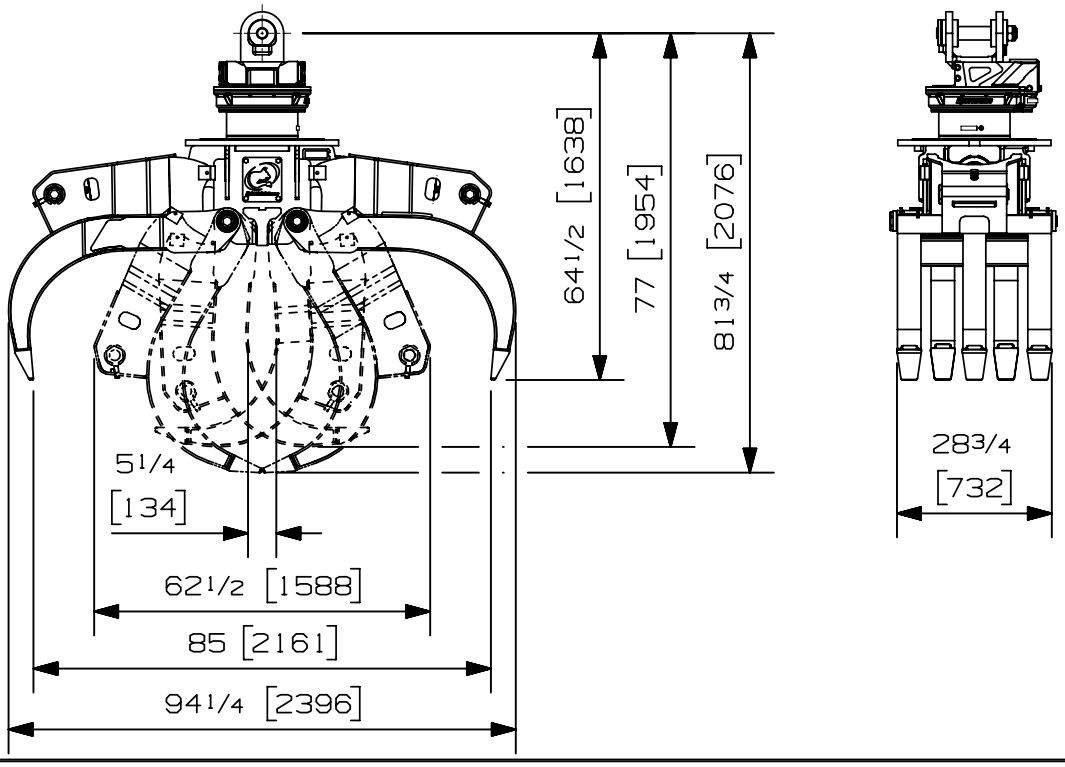


Options:
- Mini heel set (76 lbs / 34 kg)
- CounterBalance valve option (20 lbs / 9 kg)
- Synchronisation + CounterBalance valve option (N/D)
- 
- Saw bundle 404 (saw inclued) (545 lbs / 247 kg)
- Saw bundle 750 (saw inclued) (785 lbs / 356 kg)


**web site: www.rotobec.com** **email: rotobec@rotobec.com**

**Rotobec Inc.:** Head office serving OEM's and Eastern Canada Ph: (418) 383-3002 Fax: (418) 383-5334
**Rotobec West:** Branch serving Western Canada and Western USA Ph: (250) 765-1161 Fax: (250) 765-0035
**Rotobec USA:** Branch serving Eastern and Central USA Ph: (603) 444-2103 Fax: (603) 444-0327



We reserve the right to change specifications and to improve our products without notice or obligation.



07005-3705
24/01/18 D.L.

ROTOBEC
TOUGH HANDLING EQUIPMENT

# Power Attachement
## RPA4570R43 RGP-1300

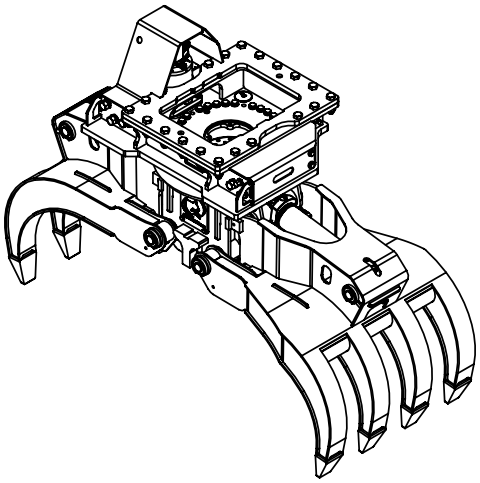

| | | |
|---|---|---|
| **Max load:** | n/a lb | n/a kg |
| **Volume:** | .38 cord of 8 ft | 1.38 $m^3$ |
| **Area tip to tip:** | 6.00 $ft^2$ | .56 $m^2$ |
| **Rotator lifting capacity:** | 130000 lb | 58967 kg |
| **Torque at relief pressure:** | 176750 lb-in<br>2200 psi | 19970 Nm<br>152 bars |
| **Weight:** | 4145 lb | 1880 kg |

| | | |
|---|---|---|
| **Rotator** | **Maximum pressure:** 5000 psi 345 bars | **Recommended flow:** 33 gpm 125 l/min |
| Rotator recommended flow will produce a speed of 15 rpm | | |

| Cylinder | Diameter | Recommended pressure | Pressure range | Flow range | Lock valves |
|---|---|---|---|---|---|
| Standard | 4 " (102 mm) | 4000 psi (276 bars) | 3000-5000 psi (207-345 bars) | 25-37 gpm (95-140 l/min.) | no |

Grapple cylinder maximum flow will theoretically produce a complete grapple open/close cycle in 4 seconds.

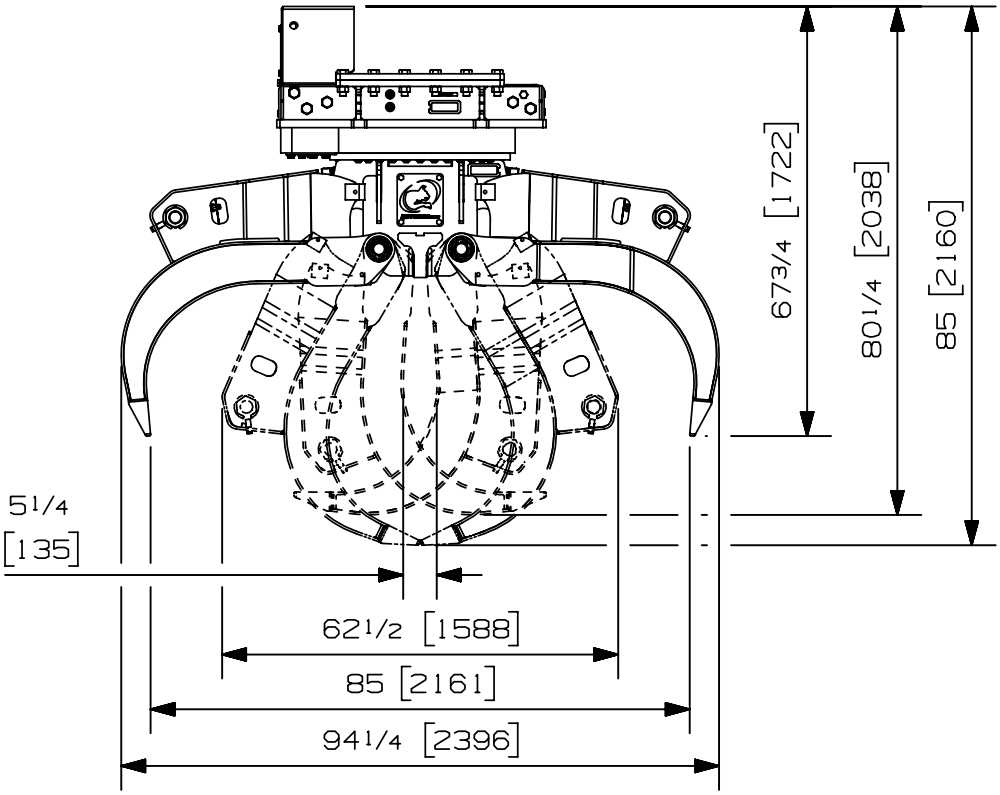


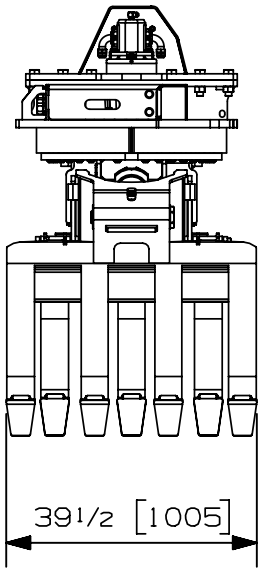


Options:

- Mini heel set (76 lbs / 34 kg)
- CounterBalance valve option (20 lbs / 9 kg)
- Synchronisation + CounterBalance valve option (N/D)
- 
- Saw bundle 404 (saw included) (545 lbs / 247 kg)
- Saw bundle 750 (saw included) (785 lbs / 356 kg)
- See also RGP-1300 option for more options


**web site: www.rotobec.com** **email: rotobec@rotobec.com**

**Rotobec Inc.:** Head office serving OEM's and Eastern Canada Ph: (418) 383-3002 Fax: (418) 383-5334
**Rotobec West:** Branch serving Western Canada and Western USA Ph: (250) 765-1161 Fax: (250) 765-0035
**Rotobec USA:** Branch serving Eastern and Central USA Ph: (603) 444-2103 Fax: (603) 444-0327



We reserve the right to change specifications and to improve our products without notice or obligation.



07004-2528
09/01/18 D.L.

ROTOBEC
TOUGH HANDLING EQUIPMENT

# Power Attachement
## RPA4570R43 RGP-1704A

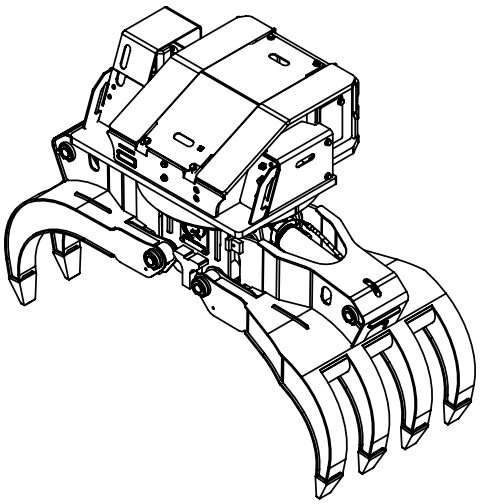

| | | |
|---|---|---|
| **Max load:** | n/a lb | n/a kg |
| **Volume:** | .38 cord of 8 ft | 1.38 $m^3$ |
| **Area tip to tip:** | 6.00 $ft^2$ | .56 $m^2$ |
| **Rotator lifting capacity:** | 170000 lb | 77111 kg |
| **Torque at relief pressure:** | 218520 lb-in<br>2200 psi | 24689 Nm<br>152 bars |
| **Weight:** | 5000 lb | 2268 kg |

| | | |
|---|---|---|
| **Rotator** | **Maximum pressure:** 5000 psi 345 bars | **Recommended flow:** 32 gpm 121 l/min |
| Rotator recommended flow will produce a speed of 12 rpm | | |

| Cylinder | Diameter | Recommended pressure | Pressure range | Flow range | Lock valves |
|---|---|---|---|---|---|
| Standard | 4 " (102 mm) | 4000 psi (276 bars) | 3000-5000 psi (207-345 bars) | 25-37 gpm (95-140 l/min.) | no |

Grapple cylinder maximum flow will theoretically produce a complete grapple open/close cycle in 4 seconds.

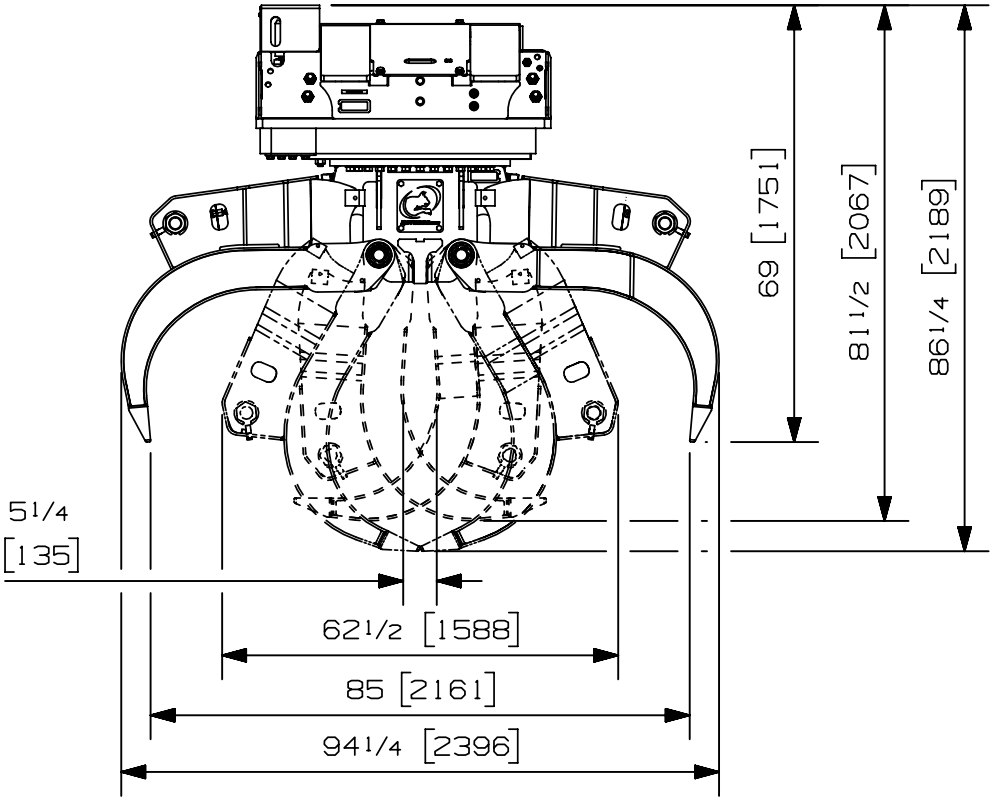


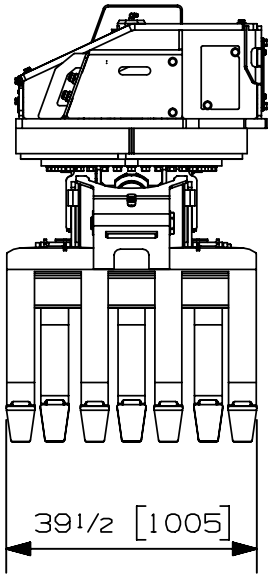


Options:
- Mini heel set (76 lbs / 34 kg)
- CounterBalance valve option (20 lbs / 9 kg)
- Synchronisation + CounterBalance valve option (N/D)
-
- Saw bundle 404 (saw included) (545 lbs / 247 kg)
- Saw bundle 750 (saw included) (785 lbs / 356 kg)
- See also RGP-1704 option for more options


**web site: www.rotobec.com** **email: rotobec@rotobec.com**

**Rotobec Inc.:** Head office serving OEM's and Eastern Canada Ph: (418) 383-3002 Fax: (418) 383-5334
**Rotobec West:** Branch serving Western Canada and Western USA Ph: (250) 765-1161 Fax: (250) 765-0035
**Rotobec USA:** Branch serving Eastern and Central USA Ph: (603) 444-2103 Fax: (603) 444-0327



We reserve the right to change specifications and to improve our products without notice or obligation.



07007-9155
09/01/18 D.L.

ROTOBEC
TOUGH HANDLING EQUIPMENT

# Power Attachement
## RPA4570R43 RGP-1702A

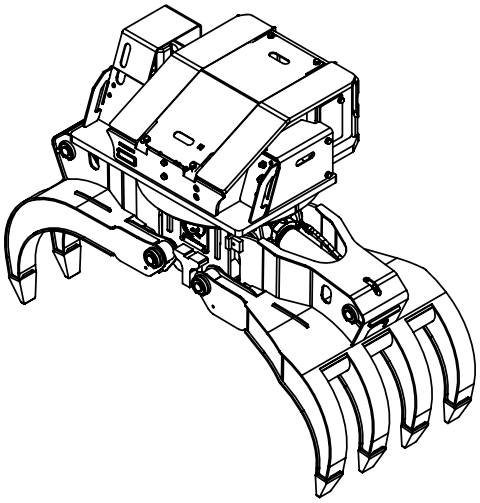

| | | |
|---|---|---|
| **Max load:** | n/a lb | n/a kg |
| **Volume:** | .38 cord of 8 ft | 1.38 $m^3$ |
| **Area tip to tip:** | 6.00 $ft^2$ | .56 $m^2$ |
| **Rotator lifting capacity:** | 170000 lb | 77111 kg |
| **Torque at relief pressure:** | 218520 lb-in<br>2200 psi | 24689 Nm<br>152 bars |
| **Weight:** | 5000 lb | 2268 kg |

| | | |
|---|---|---|
| **Rotator** | **Maximum pressure:** 5000 psi 345 bars | **Recommended flow:** 32 gpm 121 l/min |
| Rotator recommended flow will produce a speed of 12 rpm | | |

| Cylinder | Diameter | Recommended pressure | Pressure range | Flow range | Lock valves |
|---|---|---|---|---|---|
| Standard | 4 " (102 mm) | 4000 psi (276 bars) | 3000-5000 psi (207-345 bars) | 25-37 gpm (95-140 l/min.) | no |

Grapple cylinder maximum flow will theoretically produce a complete grapple open/close cycle in 4 seconds.

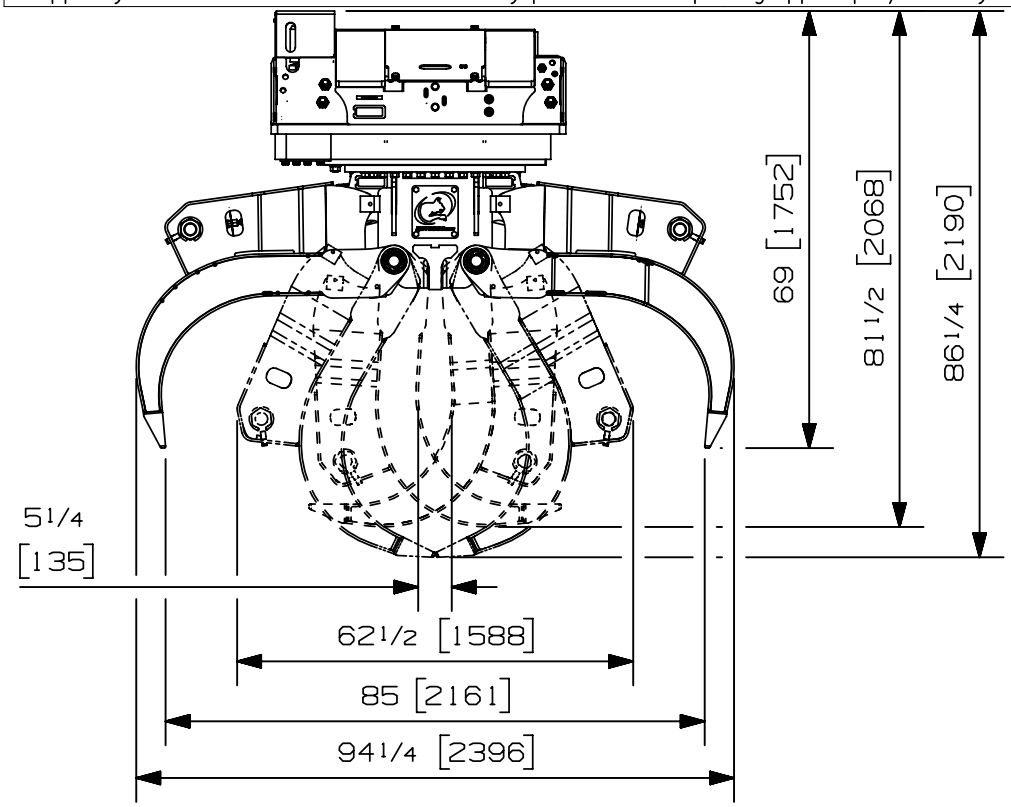


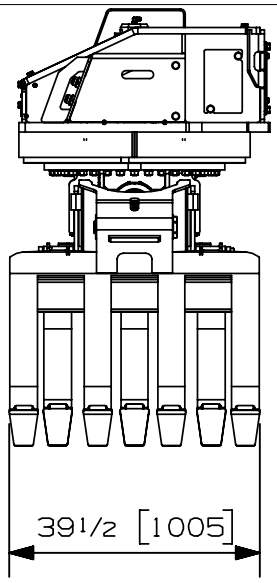


Options:
- Mini heel set (76 lbs / 34 kg)
- CounterBalance valve option (20 lbs / 9 kg)
- Synchronisation + CounterBalance valve option (N/D)
-
- See also RGP-1702 option for more options


**web site: www.rotobec.com** **email: rotobec@rotobec.com**

**Rotobec Inc.:** Head office serving OEM's and Eastern Canada Ph: (418) 383-3002 Fax: (418) 383-5334
**Rotobec West:** Branch serving Western Canada and Western USA Ph: (250) 765-1161 Fax: (250) 765-0035
**Rotobec USA:** Branch serving Eastern and Central USA Ph: (603) 444-2103 Fax: (603) 444-0327



We reserve the right to change specifications and to improve our products without notice or obligation.



07009-4550
14/08/19

ROTOBEC
TOUGH HANDLING EQUIPMENT

# Power Attachement
## RPA4570R43 RT-504

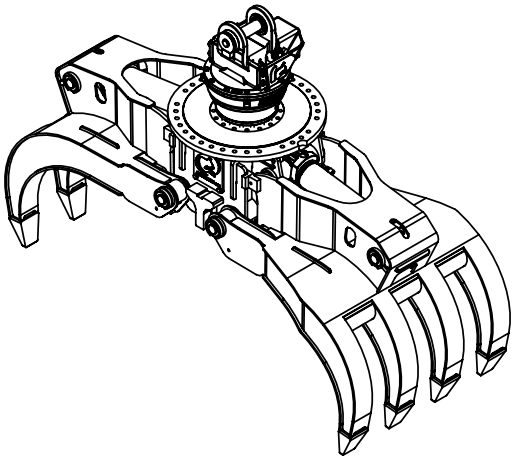

| | | |
|---|---|---|
| **Max load:** | n/a lb | n/a kg |
| **Volume:** | .38 cord of 8 ft | 1.38 $m^3$ |
| **Area tip to tip:** | 6.00 $ft^2$ | .56 $m^2$ |
| **Rotator lifting capacity:** | 50000 lb | 22680 kg |
| **Torque at relief pressure:** | 18630 lb-in<br>1450 psi | 2105 Nm<br>100 bars |
| **Weight:** | 3015 lb | 1368 kg |

| | | |
|---|---|---|
| **Rotator** | **Maximum pressure:** 5000 psi 345 bars | **Recommended flow:** 9 gpm 34 l/min |
| Rotator recommended flow will produce a speed of 25 rpm | | |

| Cylinder | Diameter | Recommended pressure | Pressure range | Flow range | Lock valves |
|---|---|---|---|---|---|
| Standard | 4 " (102 mm) | 4000 psi (276 bars) | 3000-5000 psi (207-345 bars) | 25-37 gpm (95-140 l/min.) | no |

Grapple cylinder maximum flow will theoretically produce a complete grapple open/close cycle in 4 seconds.

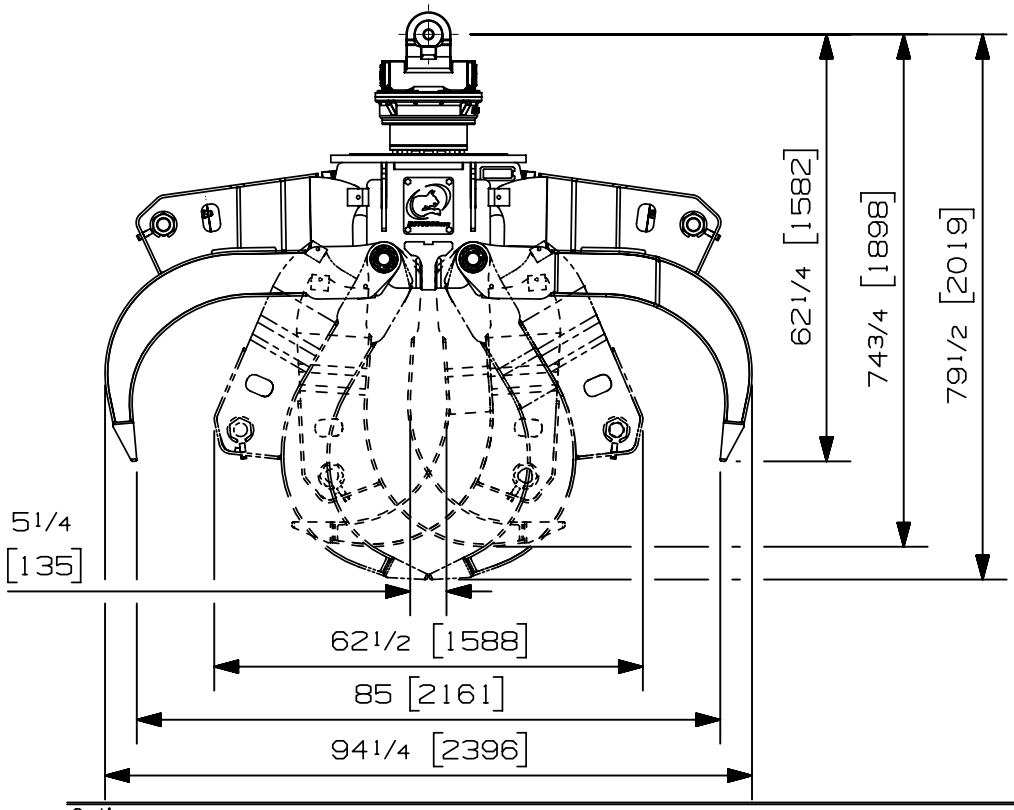


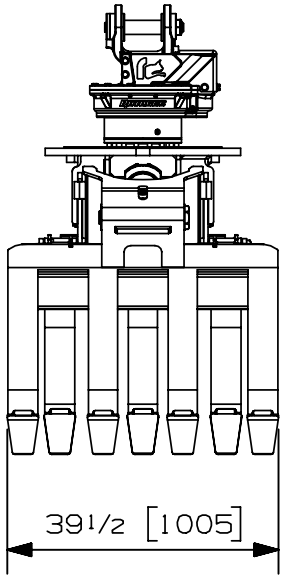


Options:

- Mini heel set (76 lbs / 34 kg)
- CounterBalance valve option (20 lbs / 9 kg)
- Synchronisation + CounterBalance valve option (N/D)
- 
- Saw bundle 404 (saw inclued) (545 lbs / 247 kg)
- Saw bundle 750 (saw inclued) (785 lbs / 356 kg)


**web site: www.rotobec.com** **email: rotobec@rotobec.com**

**Rotobec Inc.:** Head office serving OEM's and Eastern Canada Ph: (418) 383-3002 Fax: (418) 383-5334
**Rotobec West:** Branch serving Western Canada and Western USA Ph: (250) 765-1161 Fax: (250) 765-0035
**Rotobec USA:** Branch serving Eastern and Central USA Ph: (603) 444-2103 Fax: (603) 444-0327



We reserve the right to change specifications and to improve our products without notice or obligation.



07003-7848
09/01/18 D.L.

ROTOBEC
TOUGH HANDLING EQUIPMENT

# Power Attachement
## RPA4570R43 RT-1004

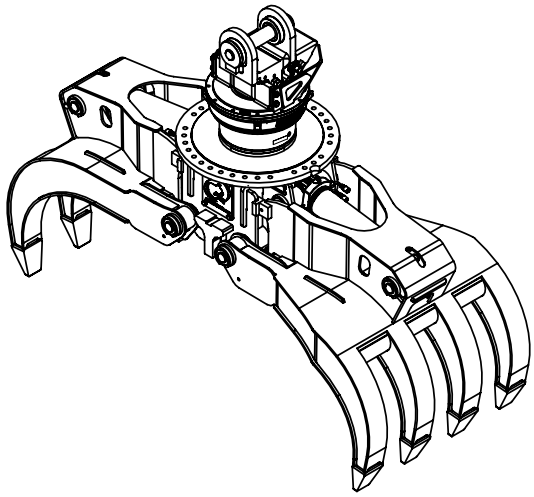

| | | |
|---|---|---|
| **Max load:** | n/a lb | n/a kg |
| **Volume:** | .38 cord of 8 ft | 1.38 $m^3$ |
| **Area tip to tip:** | 6.00 $ft^2$ | .56 $m^2$ |
| **Rotator lifting capacity:** | 100000 lb | 45359 kg |
| **Torque at relief pressure:** | 22360 lb-in<br>1450 psi | 2526 Nm<br>100 bars |
| **Weight:** | 3255 lb | 1476 kg |

| | | |
|---|---|---|
| **Rotator** | **Maximum pressure:** 5000 psi 345 bars | **Recommended flow:** 8 gpm 30 l/min |
| Rotator recommended flow will produce a speed of 20 rpm | | |

| Cylinder | Diameter | Recommended pressure | Pressure range | Flow range | Lock valves |
|---|---|---|---|---|---|
| Standard | 4 " (102 mm) | 4000 psi (276 bars) | 3000-5000 psi (207-345 bars) | 25-37 gpm (95-140 l/min.) | no |

Grapple cylinder maximum flow will theoretically produce a complete grapple open/close cycle in 4 seconds.

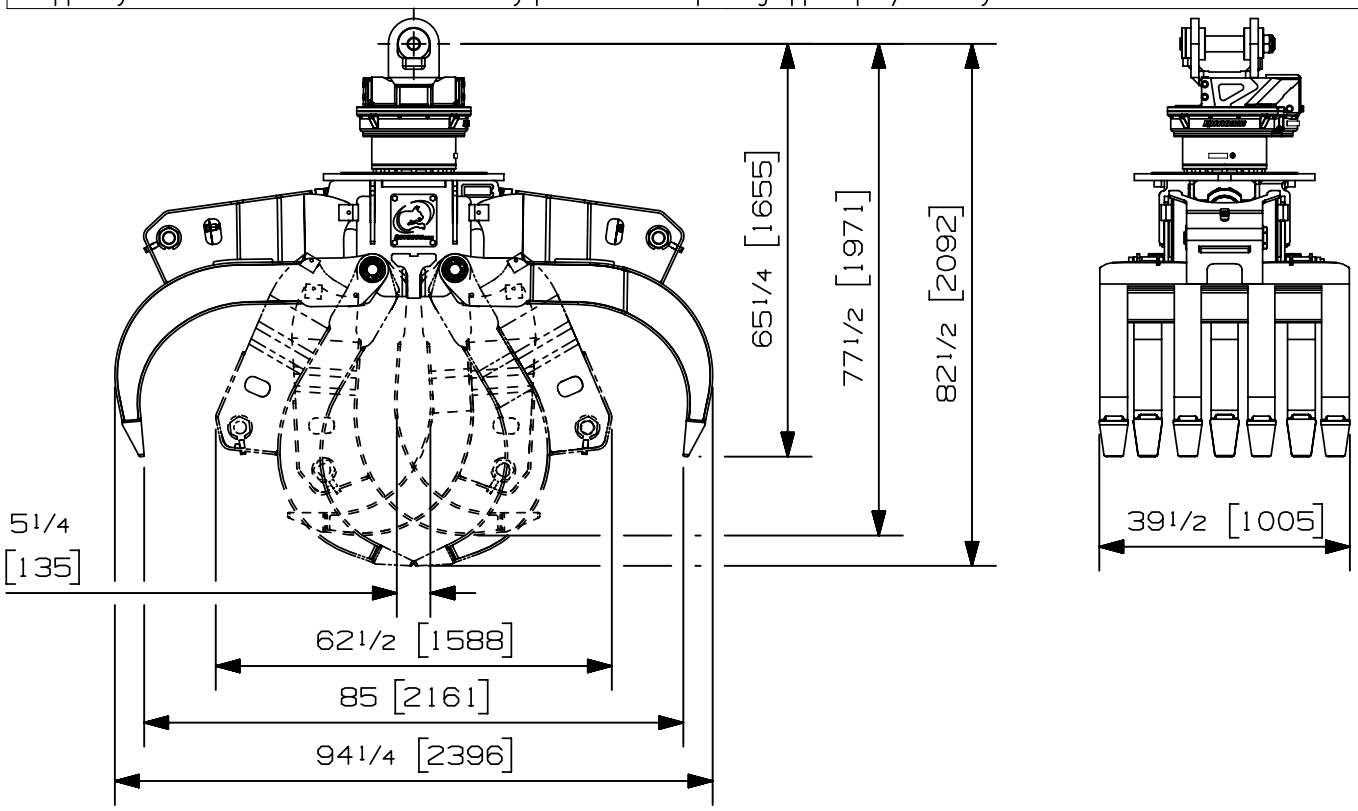


Options:
- Mini heel set (76 lbs / 34 kg)
- CounterBalance valve option (20 lbs / 9 kg)
- Synchronisation + CounterBalance valve option (N/D)
-
- Saw bundle 404 (saw inclued) (545 lbs / 247 kg)
- Saw bundle 750 (saw inclued) (785 lbs / 356 kg)


**web site: www.rotobec.com** **email: rotobec@rotobec.com**

**Rotobec Inc.:** Head office serving OEM's and Eastern Canada Ph: (418) 383-3002 Fax: (418) 383-5334
**Rotobec West:** Branch serving Western Canada and Western USA Ph: (250) 765-1161 Fax: (250) 765-0035
**Rotobec USA:** Branch serving Eastern and Central USA Ph: (603) 444-2103 Fax: (603) 444-0327



We reserve the right to change specifications and to improve our products without notice or obligation.



07003-7847
09/01/18 D.L.

ROTOBEC
TOUGH HANDLING EQUIPMENT

# Power Attachement
## RPA4570R43

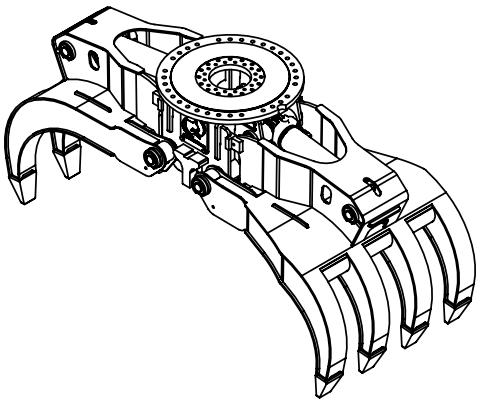

| | | |
|---|---|---|
| **Max load:** | n/a lb | n/a kg |
| **Volume:** | .38 cord of 8 ft | 1.38 $m^3$ |
| **Area tip to tip:** | 6.00 $ft^2$ | .56 $m^2$ |
| **Rotator lifting capacity:** | n/a lb | n/a kg |
| **Torque at relief pressure:** | n/a lb-in<br>n/a psi | n/a Nm<br>n/a bars |
| **Weight:** | 2570 lb | 1166 kg |

| | | |
|---|---|---|
| **Rotator** | **Maximum pressure:** n/a psi n/a bars | **Recommended flow:** n/a gpm n/a l/min |
| Rotator recommended flow will produce a speed of 0 rpm | | |

| Cylinder | Diameter | Recommended pressure | Pressure range | Flow range | Lock valves |
|---|---|---|---|---|---|
| Standard | 4 " (102 mm) | 4000 psi (276 bars) | 3000-5000 psi (207-345 bars) | 25-37 gpm (95-140 l/min.) | no |

Grapple cylinder maximum flow will theoretically produce a complete grapple open/close cycle in 4 seconds.

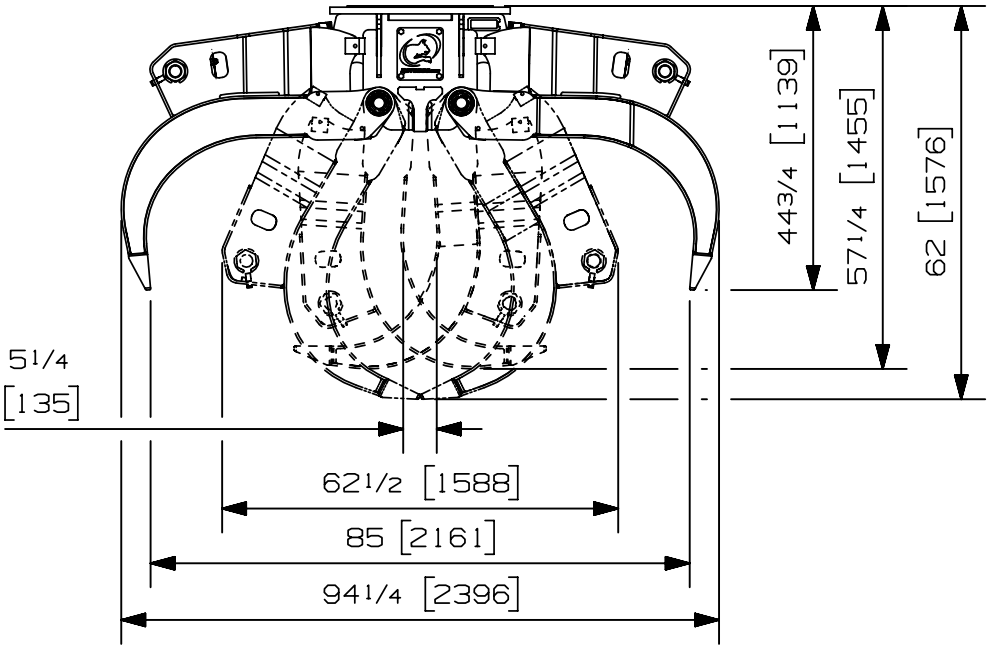


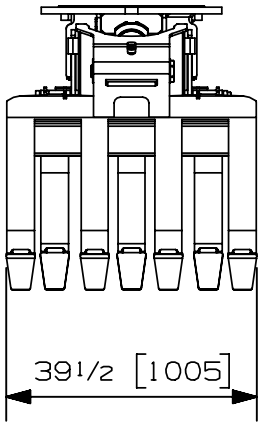


Options:
- Mini heel set (76 lbs / 34 kg)
- CounterBalance valve option (20 lbs / 9 kg)
- Synchronisation + CounterBalance valve option (N/D)
-
- Saw bundle 404 (saw included) (545 lbs / 247 kg)
- Saw bundle 750 (saw included) (785 lbs / 356 kg)


**web site: www.rotobec.com** **email: rotobec@rotobec.com**

**Rotobec Inc.:** Head office serving OEM's and Eastern Canada Ph: (418) 383-3002 Fax: (418) 383-5334
**Rotobec West:** Branch serving Western Canada and Western USA Ph: (250) 765-1161 Fax: (250) 765-0035
**Rotobec USA:** Branch serving Eastern and Central USA Ph: (603) 444-2103 Fax: (603) 444-0327



We reserve the right to change specifications and to improve our products without notice or obligation.



07008-2121
09/01/18 E.T.